SRM80

PLANETARY MIXER
OPERATOR'S MANUAL

Persons under the age of 18 are not permitted to operate or have access to this equipment per U.S. Dept. Of Labor Employment Standards Administration Sheet No. ESA913

Welcome to Univex

Thank you for purchasing this Univex Product.

Your new SRM80+ mixer has been designed with advanced performance and safety features that make it an excellent addition to your food preparation equipment. Like all Univex mixers, slicers, meat grinders and accessories, this mixer is engineered to provide years of reliable service.

If you have any questions concerning the operation of this unit, or if we can be of further assistance, please call our Customer Service Department for the location of your nearest service representative.

Univex Customer Service:

USA & Canada 800-258-6358
International 603-893-6191
Or visit us on-line at www.univexcorp.com under service agents.

Safety is our top priority

READ AND MAKE SURE THAT YOU UNDERSTAND THE INSTRUCTIONS AND SAFETY WARNINGS IN THIS BOOKLET BEFORE ATTEMPTING TO OPERATE THIS MIXER OR ATTACHMENTS.

NEVER PUT FINGERS OR HANDS IN THE BOWL WHILE THE MIXER IS OPERATING OR SERIOUS INJURY COULD RESULT.

NEVER ATTEMPT TO CLEAR A JAMMED ATTACHMENT OR STALLED MIXER WITHOUT SHUTTING THE POWER OFF AND DISCONNECTING THE ELECTRICAL POWER SUPPLY.

ALWAYS REPLACE THE POWER TAKE-OFF (PTO) CAP WHEN ATTACHMENTS ARE NOT IN USE.

DO NOT OPERATE THIS MIXER WITHOUT THE BOWL IN PLACE.

DO NOT OPERATE THIS MIXER WITHOUT THE SWING RING SAFETY GUARDS IN PLACE.

TABLE OF CONTENTS

DESCRIPTION **PAGE**

TABLE OF CONTENTS 2
LIST OF ILLUSTRATIONS 2
CHOOSING THE RIGHT LOCATION FOR YOUR MIXER 4
USER FRIENDLY SWING RING SAFETY GUARD 4-5
OPERATING THE SRM80+ MIXER 5
SECURING THE BOWL AND INSTALLING THE AGITATOR 5
USING THE BOWL LIFT 6
TIMER AND START/STOP CONTROLS 6
VARI-SPEED CONTROL 6
USING THE INGREDIENTS CHUTE 7
BOWL DOLLIES AND ADAPTER 7
USING A SMALLER BOWL 7
SPLASH EXTENSION RING 7
USING THE POWER TAKE-OFF (PTO) 8
CLEANING YOUR MIXER 9
OPERATOR'S PREVENTIVE MAINTENANCE . . . . . .9 - 9 . 1
TROUBLE SHOOTING GUIDE 10
WARRANTY . . . . . .BACK COVER

~~LIST OF ILLUSTRATIONS~~

ILLUSTRATION

FIGURE 1 OVERALL VIEW OF THE SRM80+ MIXER 3
FIGURE 2 INGREDIENTS CHUTE.....7
FIGURE 3 BEATERS, AGITATORS, BOWLS, & ACCESSORIES 11
FIGURE 4 TABLE OF MIXING CAPACITIES & RECOMMENDED AGITATORS 12
FIGURE 5A WIRING DIAGRAM 208-240V, 60HZ, 1PH / 220-240V, 50HZ, 1PH 13
FIGURE 5B WIRING DIAGRAM 208-240V, 60HZ, 3PH / 220V, 50HZ, 3PH
200V, 50/60HZ, 3PH.....14
FIGURE 5C WIRING DIAGRAM 460V, 60HZ, 3PH / 380V, 50HZ, 3PH.....15

OVERALL VIEW OF FOOD MIXER
FIGURE 1

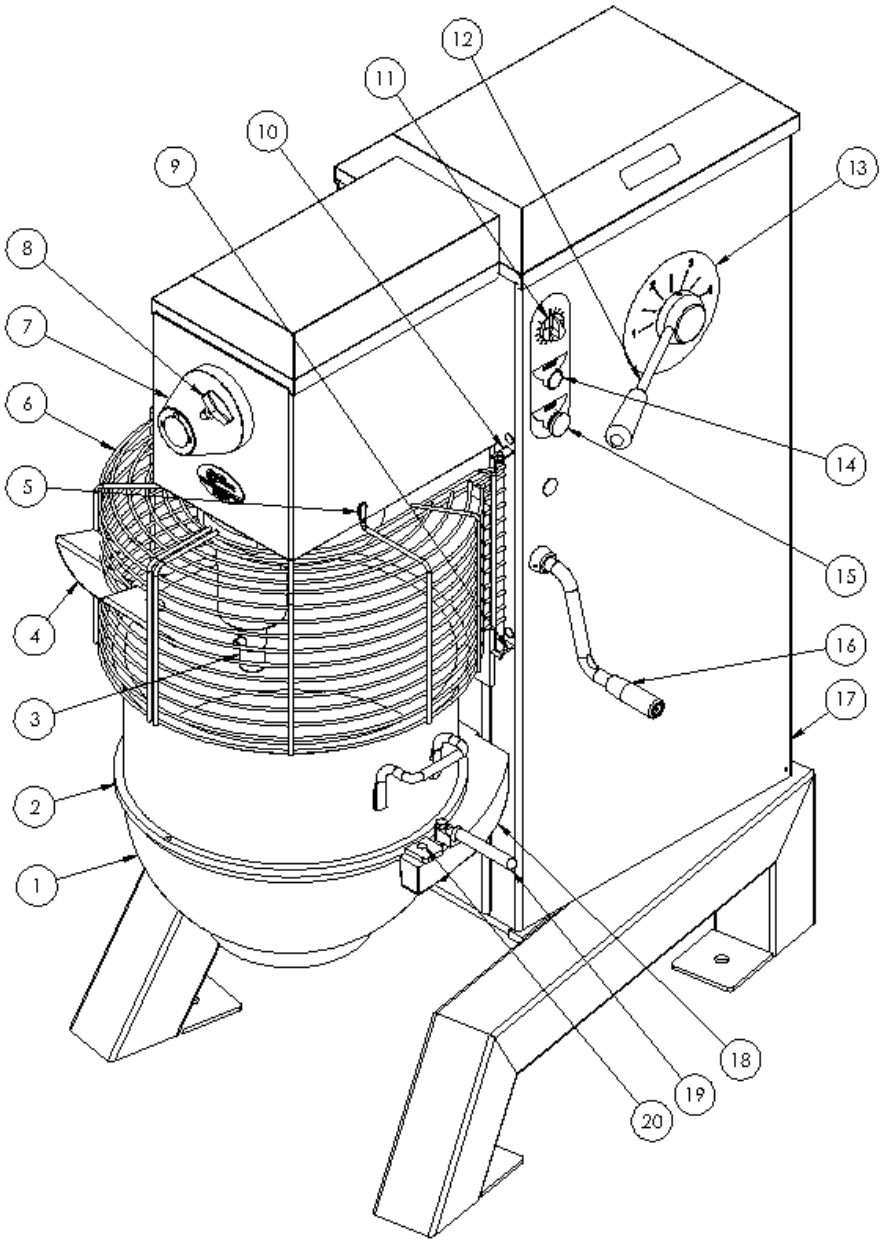

1. BOWL
2. BOWL RING
3. BEATER HEAD SHAFT
4. INGREDIENT CHUTE
5. MAGNET
6. SWING RING SAFETY GUARD
7. PTO HUB #12
8. THUMB SCREW
9. LOWER MOUNTING BRACKET
10. UPPER MOUNTING BRACKET
11. TIMER
12. SPEED CONTROL LEVER
13. SPEED INDICATOR LABEL
14. START PUSH-BUTTON (GREEN)
15. STOP PUSH-BUTTON (RED)
16. BOWL LIFT HANDLE
17. REAR ACCESS PANEL
18. BOWL SUPPORT
19. BOWL CLAMP
20. BOWL SUPPORT PIN

CHOOSING THE RIGHT LOCATION FOR YOUR NEW MIXER

When selecting the best location for the mixer, it is helpful to consider the following:

- Where is the best location for the operator, both for saving steps and easy viewing?
- Is this a good location for product flow as in:
    - Easy to get ingredients to the mixer?
    - Destination of the mix after mixing?
    - Is there existing electrical service at this location?
    - Does this location provide easy access for cleaning and service?
    - Check to be sure that your mixer with attachments does not extend out into heavy traffic areas.
    - If stands and / or portable equipment are to be used along side of your mixer, can they be moved easily to and from your mixer?

IMPORTANT ELECTRICAL SERVICE INFORMATION

Electrical wiring instructions are found in the wiring diagram (Figures 2A thru 2C) on pages 13 through 15. Before making electrical connections, CHECK the specifications on the nameplate to make sure that they agree with the available electrical service.

USER FRIENDLY SWING RING SAFETY GUARD

Your SRM80+ mixer features a two part safety guard. The Swing Ring Safety Guard is easily removed and installed, as well as dishwasher safe. It conveniently swings out of the way without having to be removed to place or sample ingredients in the bowl. Only one side of the guard needs to be open when adding ingredients. This two-piece design handles and fits conveniently in your sink or dishwasher. It also provides a clear view of the product throughout the mixing cycle.

This mixer will not operate unless the Swing Ring Safety Guard is properly engaged.
The guards activate safety switches that enable the mixer to operate only when the guards are closed. These switches protect against accidental operation of the mixer when the guards are open or removed from the mixer. The mixer will automatically stop if the guard is opened. An additional switch in the bowl lift automatically stops the mixer if the bowl is lowered from the “up” (mixing) position.

To install the Swing Ring Safety Guard, insert the pointed end of the rod at the rear of the guard into the lower mounting bracket on the mixer housing. Then insert the top end of the rod into the upper bracket by aligning the groove in the rod with the slot in the bracket. Press the rod in and allow it to drop down into position. Swing the two halves of the guard forward. Magnets located on the transmission will hold the guards in position. When the guard is properly closed, the switches will be activated and the mixer can be operated.

To remove the guard, simply reverse the installation procedure. Grip the two halves of the guard and pull it open. Use an upward motion to release each half of the guard from the bracket.

To open the guard for access to the bowl, **first turn the mixer off** by pushing the red "Stop" push-button (Figure 1 [15]). Pull open the two halves of the guard and swing one or both guards outward. It is not necessary to remove them. Close the guards and press the green "Start" push-button (Figure 1[14]) to resume mixing operations.

OPERATING THE SRM80+ MIXER

Your Univex SRM80+ mixer is designed to meet the cook's and baker's demand for an efficient, dependable appliance. It should give unfailing performance over a period of years when operated and maintained according to the instructions contained herein.

The mixer drives various agitator attachments through a beater head shaft to beat, mix, or whip liquid, viscous, or dry ingredients. The shaft is driven by a sturdy motor whose power is transmitted by a rugged, cogged belt and a continuously variable transmission (CVT) through a gear train and a planetary gear set. The speed of the beater shaft can be varied from approximately 60 to 270 revolutions per minute (RPM).

The SRM80+ mixer is equipped with a power take-off (PTO) that operates other attachments such as slicers, graters and grinders. The PTO speed can be varied from 85 to 385 rpm. **Be sure to read and follow all safety instructions provided by the manufacturers of attachments that you operate on the PTO.** The PTO hub should be covered with the PTO cap provided with your mixer when not in use to prevent accidental insertion of fingers into the PTO housing during operation.

Warning: Never put hands, spoons, utensils or other objects into the bowl while the mixer is operating!

Note: Noise emissions for this mixer are below 70db (A).

SECURING THE BOWL AND INSTALLING THE MIXER AGITATOR

Place the bowl on the bowl support (Figure 1 [18]). The indentation on the bowl ring must align with the pin at the rear of the bowl support. Align the holes in the bowl rim with the pins on the bowl support and lower the bowl into position. Secure the bowl in place by turning the bowl clamps (Figure 1 [19]).

With the bowl in the "down" position, install the desired agitator by sliding it upward on the beater head shaft (Figure 1[3]). Rotate the agitator counter-clockwise until it is engaged.

Note: Serious injury may result if the bowl is not positioned properly on the bowl support using the bowl support pins and firmly closing the clamps.

With the bowl secured, add ingredients. Liquids should be added first. The bowl is now ready to be raised to the "up"(mixing) Position by turning the bowl lift handle (Figure 1 [16]) clockwise.

Note: Exceeding the mixer capacity, (Figure 4) on page 12, can cause damage to the mixer and will void the factory warranty.

When using the wire whip agitator, raise the bowl to the "up" position first and then add ingredients to avoid wire whip damage.

Close and secure the Swing Ring Safety Guard before proceeding.

USING THE BOWL LIFT

The mixer will not operate unless the bowl is in the "up" position. Raise the bowl by turning the bowl lift handle (Figure 1 [16]) clockwise. To lower the bowl, turn the bowl lift handle counter-clockwise. If your mixer is equipped with the power lift option (instead of the handle), turn the power bowl lift switch clockwise to rase the bowl and counter-clockwise to lower the bowl.
It is necessary to lower the bowl to change the agitator. This also makes the bowl accessible for filling.

TIMER AND START/STOP CONTROLS

This mixer will start only when the Swing Ring Safety Guard is closed, the bowl is in the raised position and the timer is set or placed in the "HOLD" position. To start the mixer, first turn the timer (Figure 1 [11]) to the desired mixing time then push the Green "Start" push-button (Figure 1 [14]). The mixer will automatically stop when the timer has reached "0". To stop the mixer before the timer has reached "0", push the red "Stop" push-button (Figure 1 [15]). The timer may be set for up to 15 minutes or may be set to the "HOLD" position for continuous operation. When setting a time of less than 5 minutes, turn the timer beyond 5 minutes and then return it to the desired time.

Both the Start and Stop push-buttons are momentary contact type push-buttons. They prevent accidental start-up in the event of power interruption.

NOTE: Although the motor shuts off instantly when the Swing Ring Safety Guard is opened, or the bowl is lowered, or the "Stop" push-button is pushed, the agitator may **NOT** come to a complete stop for several revolutions. **DO NOT PUT HANDS OR UTENSILS INTO THE BOWL OR NEAR THE BEATER HEAD SHAFT UNTIL IT HAS FULLY STOPPED.**

VARI-SPEED CONTROL

A major advantage of Univex mixers is there Continuously Variable Transmission (CVT). Unlike other mixers, CVT lets you change speeds while the mixer is running. To change speeds move the speed control lever (Figure 1 [12]) to the desired speed. The speed indicator label (Figure 1 [13]) shows four speeds. Numerous intermediate speeds give the cook or baker tremendous flexibility.

Use speed "1" (slow) for heavy mixtures like pizza, bread or roll dough. Speed "1" should also be used with the meat and food chopper attachment. For most mixing tasks, start on speed "1" and progress to higher speeds as needed. Use high speeds for whipping cream and beating eggs, and thin batter. **To avoid damaging your mixer, follow the speed, volume limits and attachments recommendations shown in the table of mixing capacities (Figure 4) on page 12.**

If you notice any slippage during mixing, the mixer may be overloaded. Reduce the load, or reduce the speed until the mixing action is smooth. Refer to the Trouble-Shooting Guide on page 10.

If the mixer jams and the motor stalls, immediately press the "Stop" push-button. Take necessary steps to reduce the load. **Never put hands in the bowl to clear a jam.**

NOTE: Always return to speed "1" before shutting the mixer off. Do not move the speed control lever when the mixer is not running, because this will cause the belt to become loose and the mixer will not operate properly.

If the mixer has been shut off by the timer, or the "Stop" push-button in speed 2, 3 or 4, follow these steps to avoid belt slippage or jerky start: Empty the bowl. Set the timer to "HOLD". Press the "Start" push-button and as the mixer begins to operate, move the speed control lever back to speed "1". Press the "Stop" push-button and return the timer to "0". Your mixer is now ready for use.

USING THE INGREDIENTS CHUTE

The ingredients chute provided with your mixer enables you to add ingredients to the bowl while the mixer is running and without opening the Swing Ring Safety Guard. The chute may be installed on the front or side of either half of the guard. Once the chute is properly installed, it can remain in place permanently, if desired.

INGREDIENTS CHUTE INSTALLATION

Slide the bottom of the chute between horizontal safety guard rings and engage the chute onto the safety guard.

INDREDIENTS CHUTE
FIGURE 2

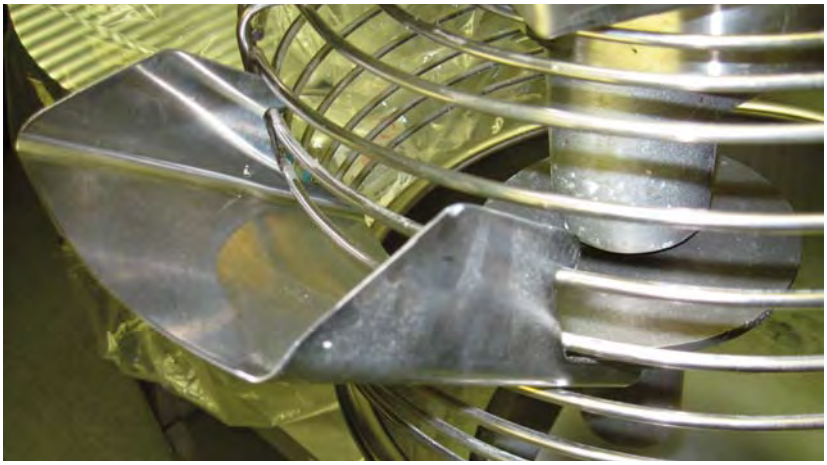

BOWL DOLLIES AND ADAPTER

Bowl dollies (Figure 3 [H]), available for the 80 quart bowl, the 60 for 80 quart bowl and for the 40 for 80 quart bowl, simplify moving large, heavy batches to the next location. To remove heavy batches of dough from the mixer, first place the bowl dolly under the bowl. Then open the bowl clamps (Figure 1 [19]) and lower the bowl onto the bowl dolly. Be sure the bowl support pins clear the bowl mounting ring before moving the bowl and dolly.

A bowl dolly adapter (Figure 3 [I]) is available to use the 80 quart bowl dolly with a 40 quart bowl.

USING SMALLER BOWLS

For maximum flexibility, a 60 quart and a 40 quart bowl are available for use on the SRM80+ mixer. Specially sized agitators must be used. See (Figure 3) on page 11 for the part numbers for these parts.

SPLASH / EXTENSION RING

A splash/extension ring (Figure 3 [J]) mounted to the bowl helps confine ingredients during the mixing of certain recipes. Never use the ring to overload the bowl. Consult the Table of Mixing capacities Figure 4 on page 12 for appropriate loads.

NOTE: Overloading the mixer beyond the factory specifications can damage the mixer and will void the warranty.

USING THE POWER TAKE-OFF (PTO)

The Power Take-Off (PTO) hub (Figure 1 [7]) accommodates #12 tapered attachments such as a vegetable slicer and shredder, or a meat and food chopper. The mixers speed control lever also controls the PTO drive speed.

Before installing attachments, turn the mixer off and disconnect the electrical power supply. Remove the PTO cap and loosen the thumb screw (Figure 1 [8]) on the PTO hub. Insert the attachment with a slight twist until it is firmly in place. Tighten the thumb screw. **Be sure to read and follow all safety instructions provided for the attachments that you operate on the PTO.**

SAFETY NOTES:

When grinding meat, chopper attachments must never run faster than speed “1”.
For vegetables, attachments may run at a higher speed.

Always turn the mixer off and disconnect the electrical power supply to install or remove the attachment.

Always return to speed “1” before shutting the mixer off.

Cover the PTO hub with the PTO cap when the PTO is not in use.

CLEANING YOUR MIXER

Consistent use of the following procedures will ensure that your mixer is in optimum operating condition.

- **Warning: disconnect the electrical power supply before cleaning.**
- Wash the body of the mixer, the bowl support, and the beater shaft with warm water and mild soap.
- Avoid excess water in the area of the safety switches that protrude from the housing where the Swing Ring Safety Guard is mounted.
- Do not rinse the mixer with a hose.
- Do not use abrasive pads to wash the mixer.
- Dry the mixer thoroughly with a soft cloth.
- Wash the bowl and beater immediately after use. If an egg mixture or flour batter have been used, rinse the bowl and beater with cold water before washing with hot water. Wash the Swing Ring Safety Guard in the same manner, or in a dishwasher.
- Dry bowls and beaters and the Swing Ring Safety Guard thoroughly.

OPERATOR'S PREVENTIVE MAINTENANCE

For best long-term performance, operators should follow these simple practices:

- Lightly lubricate the beater shaft (Figure 1 [3]) after washing with a food grade lubricant.
- Do not cover the mixer with a plastic bag, as this traps humidity inside the mixer.
- Do not overload the mixer. **Overloading is the #1 cause of mixer failure.** Follow the Table of Mixing Capacities Figure 4 on page 12. It may be helpful to post a copy of this table adjacent to the mixer.
- Keep the mixer properly lubricated. **Lack of lubrication is the #2 cause of mixer failure.** Key mixer components require lubrication after each 500 hour of operation.
- Only change speeds with the mixer running. **Changing speeds with the mixer off will cause the belts to loosen, and the mixer will not turn** (see the Trouble-Shooting Guide on page 10). Return to speed "1" before shutting the mixer off. Use the procedure described on page 6 to return the mixer to speed "1" if the mixer is shut off in a higher speed.

LUBRICATION

1. The lubrication instructions are listed in Figure 3.

2. Remove the top cover per Removal Of Top Cover on page 2.6 and remove the rear access panel.

3. In order to service the gearbox, it will be necessary to remove the transmission cover. A thin blade putty knife will prove helpful in separating the silicone sealant between the cover and the gearbox. Do not bend the cover. Thoroughly remove all dried sealant before applying new sealant when reinstalling the cover. Do not allow sealant to enter the gearbox. Silicone sealant such as Dow Corning Silastic® 732RTV or Permatex® Form-A-Gasket® are recommended when resealing the transmission.

4. Use care to avoid getting lubricant on the drive belt and pulleys. Lubricants will deteriorate the belt grip and affect the mixer performance.

WARNING: NEVER WORK ON THE TRANSMISSION WITH THE MIXER RUNNING. IT IS RECOMMENDED THAT THE ELECTRICAL SERVICE POWER CORD BE DISCONNECTED TO PREVENT ACCIDENTAL START UP.

LUBRICATION INSTRUCTIONS
FIGURE 3

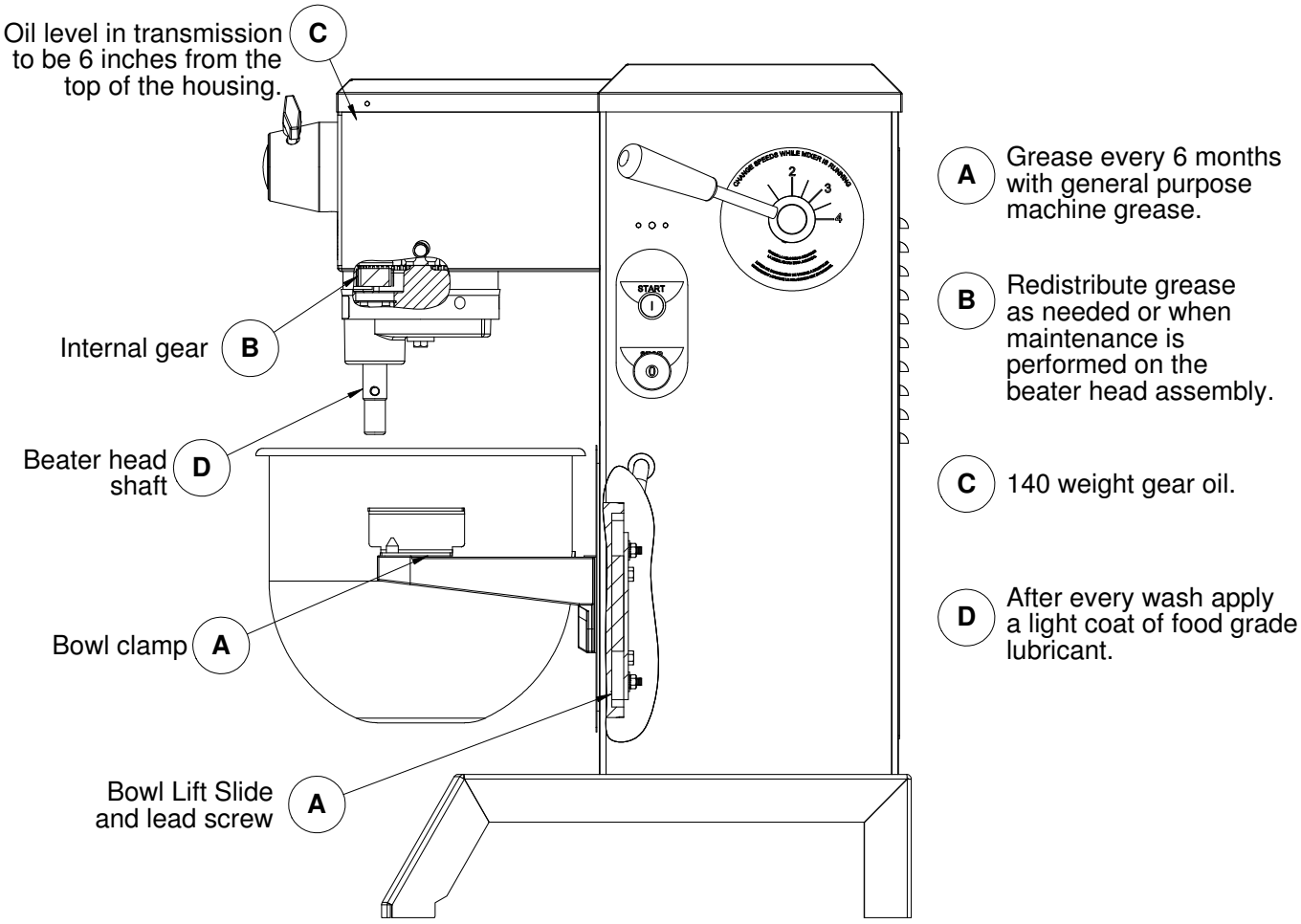

TROUBLE-SHOOTING GUIDE

TROUBLE	POSSIBLE CAUSE	REMEDY
1. Mixer will not operate	1.1 Electrical service down. 1.2 Burned switch contacts. 1.3 Timer not turned on. 1.4 Motor capacitor defective (1PH only) 1.5 Burned out motor. 1.6 Magnetic starter tripped due to overload. 1.7 Safety Ring not mounted and closed. 1.8 Bowl not raised.	1.1 Check electrical service. Replace fuse or reset circuit breaker as necessary. 1.2 Replace or clean contacts. * 1.3 Turn timer on. 1.4 Replace capacitor. * 1.5 Remove, test, repair or replace. * 1.6 Wait several minutes and push start button. 1.7 Install Safety Ring. 1.8 Raise bowl completely.
2. Mixer runs but agitator will not turn.	2.1 Shifting speed with the mixer not running. 2.2 Broken or slipping belt. 2.3 Key or pin sheared on input shaft, input gear, bevel pinion, vertical shaft or beater shaft	2.1 With mixer running, slowly move speed control lever forward then backward to re-engage belt. 2.2 Tighten or replace. * 2.3 Notify a service agent.
3. Agitator stalls during mixing	3.1 Loose belt. 3.2 Mixer bowl is over-loaded. 3.3 Speed set too high for the mix. 3.4 Contamination of belt with grease.	3.1 Readjust pulley center distance to tighten belt. * 3.2 Adjust contents of bowl per Mixing Capacities Table. 3.3 Shift speed lower till beater head rotates smoothly. 3.4 Clean pulleys and replace belt. *
4. Speeds will not change properly.	4.1 Loose belt. 4.2 Vari-speed pulley inoperable.	4.1 Readjust pulley center distance to tighten belt. * 4.2 Remove, clean and lubricate or replace.*
5. Mixer runs but repeatedly cuts out and stops	5.1 Mixer bowl is over-loaded. 5.2 Speed set too high for the mix. 5.3 Service voltage too low or fluctuating. 5.4 Starter improperly set.	5.1 Adjust contents of bowl per Mixing Capacities Table. 5.2 Shift speed lower till beater head rotates smoothly. 5.3 Check electrical voltage.* 5.4 Adjust amp setting on starter.*
6. Attachments contact bottom of bowl.	6.1 Dented bowl. 6.2 Bowl height is set too high.	6.1 Remove dent or replace bowl. 6.2 Reset bowl height. *
7. Attachments contact side of bowl.	7.1 Dented bowl. 7.2 Insufficient clearance between bottom of bowl and beater.	7.1 Remove dent or replace bowl. 7.2 Adjust bowl height. *
8. Excessive noise.	6.1 Gears need to be repacked with grease or oil level is low. 6.2 Badly worn or frayed drive belts. 6.3 Attachments hitting bowl. 6.4 Overloaded mixing bowl.	6.1 Notify a service agent. 6.2 Replace belt. * 6.3 Inspect for cause in items 5 above. 6.4 Adjust contents of bowl per Mixing Capacities Table.

* Remedies designated with an *Should not be attempted by untrained personnel.

Beaters, Agitators, Bowls, and Accessories
Available for the SRM80+ Mixer
Figure 3
Part numbers (size in quarts)

A. Batter Beater 1080020 (80) Optional 1061096 (40 for 80) 1061083 (60 for 80)	H. Bowl Dolly Optional 1080971 (80) 1061971 (60 for 80) 1030971 (40 for 80)
B. Wire Whip 1080033 (80) Optional 1061182 (40 for 80) 1061095 (60 for 80)	I. 40 for 80 Dolly Adapter Optional 1030972 (40)
C. Dough Hook 1080034 (80) Optional 1061090 (40 for 80) 1061089 (60 for 80)	J. Splash/Extension Ring Optional 1080049 (80) 1061299 (40 for 80) 1061298 (60 for 80)
D. Pastry Knife Optional 1080032 (80) 1061088 (40 for 80) 1061087 (60 for 80)	K. Vegetable Slicer/Grater Optional VS9 Slicer 1000950 VS9H Grater 1001050
E. Four-Wing Beater Optional 1080036 (80) 1061301 (40 for 80) 1061197 (60 for 80)	L. Meat & Food Chopper Optional ALMFC12 1000550
F. sweet Dough Beater Optional 1080031 (80) 1061313 (40 for 80) 1061229 (60 for 80)	M. Ingredient Chute 1000541
G. Bowl 1080013 (80) Optional 1080038 (40 for 80) 1080047 (60 for 80)	K. Bowl Scraper 1000426 (80) 1000427 (80)

Table of Mixing capacity and Recommended Agitators

Figure 4

MODEL		**SRM 80+**	
Bowl capacity		90 qt.	85.2 L
Attachment Hub Size		#12	
Motor		3 Hp	
Kitchen Capacities (single batches)	**Agitator**		
Mashed potatoes	Batter beater, 4-Wing beater	50 lb.	22.7 kg.
Whipping cream	Wire whip, 4-Wing beater	16 qt.	15.1 L.
Mayonnaise	Batter beater, Wire whip, 4-Wing beater	22 qt. (oil)	20.8 L. (oil)
Egg whites	Wire whip	3 qt.	2.8 L.
Meringue	Wire whip	2 qt.(water)	1.9 L. (water)
Waffle or pancake batter	Batter beater	30 qt.	28.4 L.
Bakery Capacities (single batches)	**Agitator**		
Pie dough	Pastry knife	60 lb.	27.3 kg.
Cake	Batter beater, 4-Wing beater	60 lb.	27.3 kg.
Short sponge cake	Wire whip, 4-Wing beater	70 lb.	31.8 kg.
Sponge cake batter	Wire whip, 4-Wing beater	54 lb.	24.5 kg.
Angle food batter (8-10 oz. cake)	Wire whip, 4-Wing beater	60 cakes	60 cakes
Marshmallow icing	4-Wing beater	6½ lb.	3.0 kg.
Fondant icing	Batter beater	45 lb.	20.4kg.
Shortening & sugar creamed	Batter beater	55 lb.	25.0 kg.
Egg & sugar for sponge cake	Batter beater, 4-Wing beater	36 lb.	16.4 kg.
Use only speed 1 for:			
Pizza dough			
Thin, 40% AR	Dough hook	40 lb.	18.2 kg.
Medium, 50% AR	Dough hook	75 lb.	34.1 kg.
Thick, 60% AR	Dough hook	80 lb.	36.4 kg.
Use only speed 1 or 2 for:			
Bread / roll dough			
Heavy, 55% AR	Dough hook	80 lb.	36.4 kg.
Light to medium 60%AR	Dough hook	80 lb.	36.4 kg.
Raised doughnut dough 65% AR	Dough hook	60 lb.	27.3 kg.

NOTES: Recommended speeds are for the capacities listed.
Dough capacity, for bread, rolls, pizza, bagels or doughnut, is based on a 12% flour moisture and 70˚F (21˚C) water temperature. Reduce capacity by 10% if cold water is used.
If higher gluten flour is used, reduce total capacity by 10%.
AR% (Absorption Ratio) = the weight of the water divided by the weight of the flour.
The lower the AR% the stiffer and more difficult the dough is to mix.
An AR% below 40% will reduce the total capacity.
1 Gallon of water = 8.3 lb. (1 liter of water = 2.2lb.)

WIRING DIAGRAM
(208-240V, 60HZ, 1PH) (220-240V, 50HZ, 1PH)
FIGURE 5A

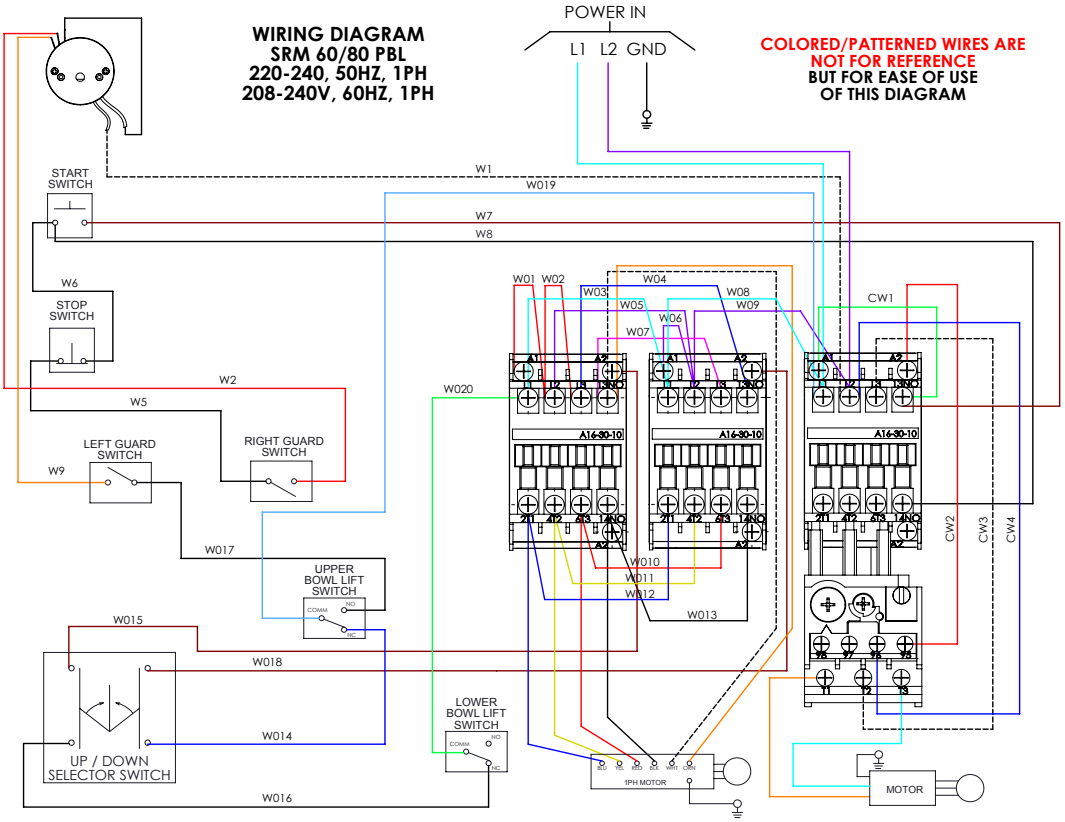

PART NUMBER	WIRE NUMBER	GA	SEE NOTE	LENGTH	END A SEE NOTE	END B SEE NOTE	COLOR
8800238	W1	16	5	41	1	3	WHITE
	W2	16	5	23	2	4	BLACK
	W3	16	5	12	2	2	WHITE
	W4	16	5	12	2	2	RED
	W5	16	5	22	1	2	RED
	W6	16	5	2 1/2	1	1	BLACK
	W7	16	5	49	1	2	WHITE
	W8	16	5	44	1	1	RED
	W9	16	5	41	1	4	WHITE
	W10	16	5	12	1	1	WHITE
	W11	16	5	12	1	1	WHITE
	W12	16	5	12	1	1	WHITE
PART OF CONTACTOR	CW1	16	5	2 1/2	1	1	RED
	CW2	16	5	7	1	1	RED
	CW3	16	5	7	1	1	RED
	CW4	16	5	10	1	1	BLACK

NOTES:

1. ATTACH AMP 925552-2
2. ATTACH MOLEX 19002-0025(1/4" F)
3. ATTACH MOLEX 19001-0009(3/16" M)
4. ATTACH MOLEX 19002-0029(3/16" F)
5. MATERIAL: 1015TEW CSA AND UL APPROVED
6. TO BE PACKAGED IN SEALED PLASTIC BAG WITH PART NUMBER LABEL

PART NUMBER	WIRE NUMBER	GA	SEE NOTE	LENGTH (IN)	END A SEE NOTE	END B SEE NOTE	COLOR
8800232	W01	16	4	5	1	1	RED
	W02	16	4	5	1	1	RED
	W03	16	4	5	1	1	RED
	W04	16	4	5	1	1	RED
	W05	16	4	6	1	1	RED
	W06	16	4	6	1	1	BLK
	W07	16	4	6	1	1	WHT
	W08	16	4	5	1	1	RED
	W09	16	4	5	1	1	RED
	W010	16	4	5	1	1	RED
	W011	16	4	5	1	1	RED
	W014	16	4	23	1	2	RED
	W015	16	4	52	1	1	WHT
	W016	16	4	28	1	2	WHT
	W018	16	4	54	1	1	BLK
	W019	16	4	56	1	2	RED
	W020	16	4	45	1	2	RED
	W22	16	4	5	1	1	RED
	W29	16	4	5	1	1	RED
	W30	16	4	15	2	2	BLK
	W40	16	4	52	2	3	BLK
	W41	16	4	45	2	3	WHT
	W42	16	4	9	1	3	RED
	W43	16	4	15	3	3	GRN

IMPORTANT: Before making any electrical connections, check the specifications on the data plate, (located on the rear access panel Figure 1 [17]), to make sure that they agree with those of your electrical service.

WARNING: Whenever maintenance is being performed, or whenever the top cover or rear access panel have been removed, **DISCONNECT THE ELECTRICAL POWER SUPPLY** and place a tag on it indicating that the mixer is being worked on.

WIRING DIAGRAM
(208-240V, 60HZ, 3PH) (220V, 50HZ, 3PH) (200V, 50/60HZ, 3PH)
FIGURE 5B

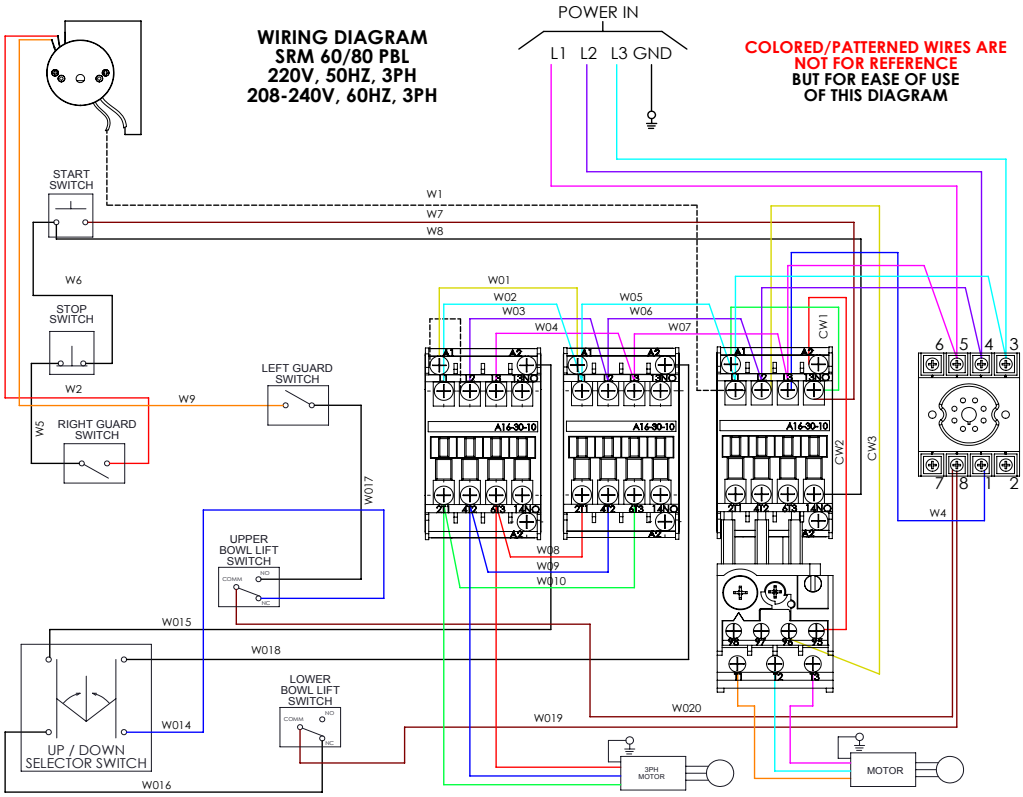

PART NUMBER	WIRE NUMBER	GA	SEE NOTE	LENGTH	END A SEE NOTE	END B SEE NOTE	COLOR
8800237	W1	16	5	39	1	3	WHITE
	W2	16	5	22	2	4	BLACK
	W3	16	5	12	2	2	WHITE
	W4	16	5	12	2	2	RED
	W5	16	5	22	1	2	RED
	W6	16	5	2 1/2	1	1	BLACK
	W7	16	5	45	1	2	WHITE
	W8	16	5	42	1	1	RED
	W9	16	5	39	1	4	WHITE
	W10	16	5	12	1	1	WHITE
	W11	16	5	12	1	1	WHITE
	W12	16	5	12	1	1	WHITE

PART OF CONTACTOR	CW1	16	5	2 1/2	1	1	RED
	CW2	16	5	7	1	1	RED
	CW3	16	5	7	1	1	RED
	CW4	16	5	10	1	1	BLACK

NOTES:

1. ATTACH AMP 925552-2
2. ATTACH MOLEX 19002-0025(1/4" F)
3. ATTACH MOLEX 19001-0009(3/16" M)
4. ATTACH MOLEX 19002-0029(3/16" F)
5. MATERIAL: 1015TEW CSA AND UL APPROVED
6. TO BE PACKAGED IN SEALED PLASTIC BAG WITH PART NUMBER LABEL

PART NUMBER	WIRE NUMBER	GA	SEE NOTE	LENGTH (IN)	END A SEE NOTE	END B SEE NOTE	COLOR
8800232	W01	16	4	5	1	1	RED
	W02	16	4	5	1	1	RED
	W03	16	4	5	1	1	RED
	W04	16	4	5	1	1	RED
	W05	16	4	6	1	1	RED
	W06	16	4	6	1	1	BLK
	W07	16	4	6	1	1	WHT
	W08	16	4	5	1	1	RED
	W09	16	4	5	1	1	RED
	W010	16	4	5	1	1	RED
	W011	16	4	5	1	1	RED
	W014	16	4	23	1	2	RED
	W015	16	4	52	1	1	WHT
	W016	16	4	28	1	2	WHT
	W018	16	4	54	1	1	BLK
	W019	16	4	56	1	2	RED
	W020	16	4	45	1	2	RED
	W22	16	4	5	1	1	RED
	W29	16	4	5	1	1	RED
	W30	16	4	15	2	2	BLK
	W40	16	4	52	2	3	BLK
	W41	16	4	45	2	3	WHT
	W42	16	4	9	1	3	RED
	W43	16	4	15	3	3	GRN

IMPORTANT: Before making any electrical connections, check the specifications on the data plate, (located on the rear access panel Figure 1 [17]), to make sure that they agree with those of your electrical service.

WARNING: Whenever maintenance is being performed, or whenever the top cover or rear access panel have been removed, **DISCONNECT THE ELECTRICAL POWER SUPPLY** and place a tag on it indicating that the mixer is being worked on.

WIRING DIAGRAM
(460V, 60HZ, 3PH) (380V, 50HZ, 3PH)
FIGURE 5C

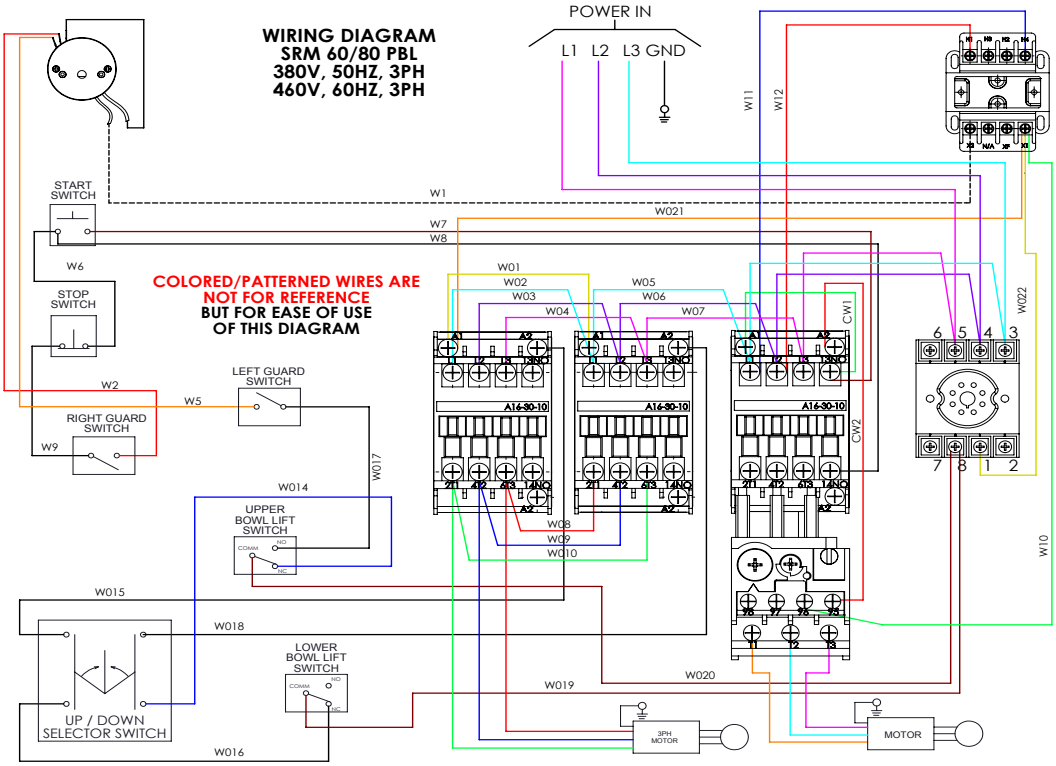

PART NUMBER	WIRE NUMBER	GA	SEE NOTE	LENGTH	END A SEE NOTE	END B SEE NOTE	COLOR
8800237	W1	16	5	39	1	3	WHITE
	W2	16	5	22	2	4	BLACK
	W3	16	5	12	2	2	WHITE
	W4	16	5	12	2	2	RED
	W5	16	5	22	1	2	RED
	W6	16	5	2 1/2	1	1	BLACK
	W7	16	5	45	1	2	WHITE
	W8	16	5	42	1	1	RED
	W9	16	5	39	1	4	WHITE
	W10	16	5	12	1	1	WHITE
	W11	16	5	12	1	1	WHITE
	W12	16	5	12	1	1	WHITE

PART OF CONTACTOR	CW1	16	5	2 1/2	1	1	RED
	CW2	16	5	7	1	1	RED
	CW3	16	5	7	1	1	RED
	CW4	16	5	10	1	1	BLACK

NOTES:

1. ATTACH AMP 925552-2
2. ATTACH MOLEX 19002-0025(1/4" F)
3. ATTACH MOLEX 19001-0009(3/16" M)
4. ATTACH MOLEX 19002-0029(3/16" F)
5. MATERIAL: 1015TEW CSA AND UL APPROVED
6. TO BE PACKAGED IN SEALED PLASTIC BAG WITH PART NUMBER LABEL

PART NUMBER	WIRE NUMBER	GA	SEE NOTE	LENGTH (IN)	END A SEE NOTE	END B SEE NOTE	COLOR
8800232	W01	16	4	5	1	1	RED
	W02	16	4	5	1	1	RED
	W03	16	4	5	1	1	RED
	W04	16	4	5	1	1	RED
	W05	16	4	6	1	1	RED
	W06	16	4	6	1	1	BLK
	W07	16	4	6	1	1	WHT
	W08	16	4	5	1	1	RED
	W09	16	4	5	1	1	RED
	W010	16	4	5	1	1	RED
	W011	16	4	5	1	1	RED
	W014	16	4	23	1	2	RED
	W015	16	4	52	1	1	WHT
	W016	16	4	28	1	2	WHT
	W018	16	4	54	1	1	BLK
	W019	16	4	56	1	2	RED
	W020	16	4	45	1	2	RED
	W22	16	4	5	1	1	RED
	W021	16	4	15	1	1	BLK
	W022	16	4	15	1	1	GRN
	W29	16	4	5	1	1	RED
	W40	16	4	52	2	3	BLK
	W41	16	4	45	2	3	WHT
	W42	16	4	9	1	3	RED

IMPORTANT: Before making any electrical connections, check the specifications on the data plate, (located on the rear access panel Figure 1 [17]), to make sure that they agree with those of your electrical service.

WARNING: Whenever maintenance is being performed, or whenever the top cover or rear access panel have been removed, **DISCONNECT THE ELECTRICAL POWER SUPPLY** and place a tag on it indicating that the mixer is being worked on.

Warranty

The Univex SRM80+ mixer carries a two-Year, on-site, parts and labor warranty against any defects in materials or workmanship. The two-year period begins on the date of purchase by the end user and remains in full effect provided the unit is used properly in accordance with our instructions. Any Work to be performed under this warranty must be performed between the hours of 8:00 a.m. and 5:00 p.m. local time, Monday through Friday. Univex will not cover overtime charges of any kind. Please call the Univex Warranty Service Department at (800) 258-6358 to report any warranty claims before arranging repair or attempting to return the unit to Univex Corporation.

Damages incurred in transit or incurred because of installation error, accident, alteration or misuse are not covered. Transit damages should be reported to the carrier immediately.

Univex will not be liable for any consequential, compensatory, incidental or special damages.

univex

3 Old Rockingham Road, Salem, N.H. 03079-2140 Telephone -603-893-6191 Fax 1-603-893-1249

TOLL FREE ORDERING FAX 1-800-356-5614