Installation, Operation & Maintenance Manual

For OptiPure ScaleX2® Systems
Model: SX2-12

NOTICE TO INSTALLER:

DO NOT DISCARD THIS MANUAL AFTER INSTALLATION. THIS MANUAL CONTAINS IMPORTANT OPERATION, MAINTENANCE AND PRECAUTIONARY INFORMATION. PLEASE PRESENT THIS MANUAL TO USER/OPERATOR/OWNER AFTER INSTALLATION.

IT IS STRONGLY ENCOURAGED THAT YOU READ THIS MANUAL BEFORE INSTALLING SYSTEM TO ENSURE THE BEST POSSIBLE INSTALLATION.

INSTALLATION MUST CONFORM TO ALL LOCAL AND STATE PLUMBING CODES AND REGULATIONS.

CONNECT SYSTEM TO COLD WATER SUPPLY ONLY. WATER TEMP. CAN NOT EXCEED 100°F/28°C.

SYSTEM MUST BE INSTALLED IN A VERTICAL AND UPRIGHT POSITION.

SCALEX2® SYSTEMS MUST NOT BE USED IN CONJUNCTION WITH POLYPHOSPHATE OR ANY OTHER SCALE INHIBITOR.

DO NOT INSTALL FILTERS DOWNLINE FROM THE SCALEX2® SYSTEM. SCALEX2® MUST BE THE LAST FILTER SYSTEM BEFORE THE EQUIPMENT.

DO NOT USE WITH WATER THAT IS MICROBIOLOGICALLY UNSAFE OR OF UNKNOWN QUALITY WITHOUT ADEQUATE DISINFECTION BEFORE OR AFTER THE SYSTEM.

NOTICE TO USER/OPERATOR/OWNER:

PLEASE COMPLETE THE PRODUCT REGISTRATION CARD AND MAIL OR FAX TO MANUFACTURER. PLEASE RETAIN THIS MANUAL FOR FUTURE REFERENCE FOR PARTS, MAINTENANCE OR TROUBLE-SHOOTING.

IT IS RECOMMENDED THAT ALL PERSONNEL RESPONSIBLE FOR OPERATION AND MAINTENANCE OF THIS PRODUCT READ THE PRECAUTIONS, OPERATION AND MAINTENANCE SECTIONS OF THIS MANUAL.

Introduction

Your new OptiPure ScaleX2® FoodService Filtration System will condition the tap water providing optimum water characteristics for their specified applications. The result is reduced equipment maintenance requirements, longer equipment life and improved quality & consistency of your products. Proper system installation and routine filter changes will ensure years of trouble-free operation and performance.

The ScaleX2® System is built with the finest and most advanced materials and each system is quality inspected and pressure tested prior to shipment. With proper installation and routine maintenance, you will have years of trouble-free operation.

Please refer to this manual when performing routine filter changes. The instructions make periodic maintenance quick and easy, and ensure you will receive maximum benefit from your system.

System Specifications

Maximum Pressure: 125 psi/8.6 bar

Maximum Temperature: 100°F/38°C, Min.: 35°F/2°C

Inlet/Outlet Connections: 1/2" fnpt

Service Flow Rate: 2.0 gpm /7.56 lpm

Capacity: Change filters at gallon rating or at least once a year.

Installation Precautions

- Do **NOT** install system on line pressure above 125 psi.
- Do **NOT** install system on HOT water line. Failure to limit line temperature to 100°F may result in housing failure and damage.
- Do **NOT** install the system backwards with the feed water line connected to the outlet.
- Do **NOT** use liquid pipe compounds for fitting connections. Use a maximum of two to three wraps of Teflon tape.
- Do **NOT** solder plumbing connections attached to filter housing or inlet valve. Inlet valve and filter housing will be damaged by high temperature.
- Do **NOT** allow system to freeze. Turn off water supply to housing and drain housing if temperature falls below 32°F.
- Do **NOT** install system in direct sunlight or where system is exposed to harsh chemicals or may be subjected to being struck by moving equipment, carts, mops or any other item that may cause damage.
- **ALLOW** a minimum of 3" under the housing to allow for filter replacement.
- **IF** water hammer is evident, install water hammer arrestors before OptiPure unit.
- Do **NOT** overtighten fitting connections into inlet valve our housing outlet.
- **Always** back-up valves and fittings with a wrench when installing a fitting to avoid turning the valve.
- Do **NOT** install the unit behind equipment where it may be difficult to access the system for filter replacement.

Position the ScaleX2® unit in a suitable location downstream from existing filters. The direction of flow through the ScaleX2® unit is always left to right; keep this in mind when determining installation location. Do NOT mount the ScaleX2® system near any source of heat. Also, do not mount the system above any device or area that would be adversely affected by water.

Installation Procedure (See Installation Drawings for Detail)

1. Turn off all equipment to be fed by the ScaleX2® System, locate water supply cut-off valve and turn off.
2. Determine if the water supply line has an existing water treatment system. If so, examine system for use of polyphosphate or other scale inhibitors. ScaleX2® will not be effective if used in conjunction with other scale inhibitors. Remove the scale inhibitors for the water line or discontinue installation.
3. Install a 1/2" full-flow ball valve on the water supply side that will feed the water system.
4. Anchor the ScaleX2® System on a wall stud or suitable mounting material spanning wall studs. **System must be upright and vertical.**
5. Run a suitable line from the 1/2" full-flow ball valve at the tap water source to the inlet ball valve on the left side of the ScaleX2® system. Use 2-3 wraps of Teflon tape and brace the inlet ball valve on the system with a wrench when connecting the feed water line. **NOTE: DO NOT OVERTIGHTEN CONNECTION FITTING INTO BALL VALVE.**
6. Select the appropriate size tubing for the equipment being fed and connect it to the outlet of the Scal eX2® System. NOTE: DO NOT connect the tubing to the equipment at this time. Prior to making con nection to the equipment this line will be used to facilitate flushing the system. As an option, a drain valve in a tee on the outlet side of the ScaleX2® system could be provided in the line to facilitate flushing when changing filters.
7. With System inlet valve closed, slowly open the 1/2" full-flow ball valve at the tap water source. Check for leaks.
8. If a drain valve was not installed on the outlet side of the system, hold the tubing that will connect to equipment in a clean bucket or over sink or drain. Open the System inlet feed valve and allow water to flush through system for 5 minutes at the specified system flow rate to allow air and any carbon fines to escape. **NOTE: NO ACTIVATION IS REQUIRED FOR THE OPTIPURE SYSTEM TO PERFORM PROPERLY. FLUSHING IS RECOMMENDED TO ALLOW AIR TO ESCAPE THE SYSTEM AND REMOVE ANY FINES PRIOR TO CONNECTING TO EQUIPMENT.**
9. Make certain that the end of the tubing to be connected to the equipment is clean and sanitized.

10. Connect tubing to equipment. Open all water supply valves and check for leaks.

Installation Procedure - Continued

11. If no leaks turn on equipment and check for normal operation.

12. Register your warranty using the enclosed warranty card or go to www.filterxpress.com

Installation Drawings & Dimensions

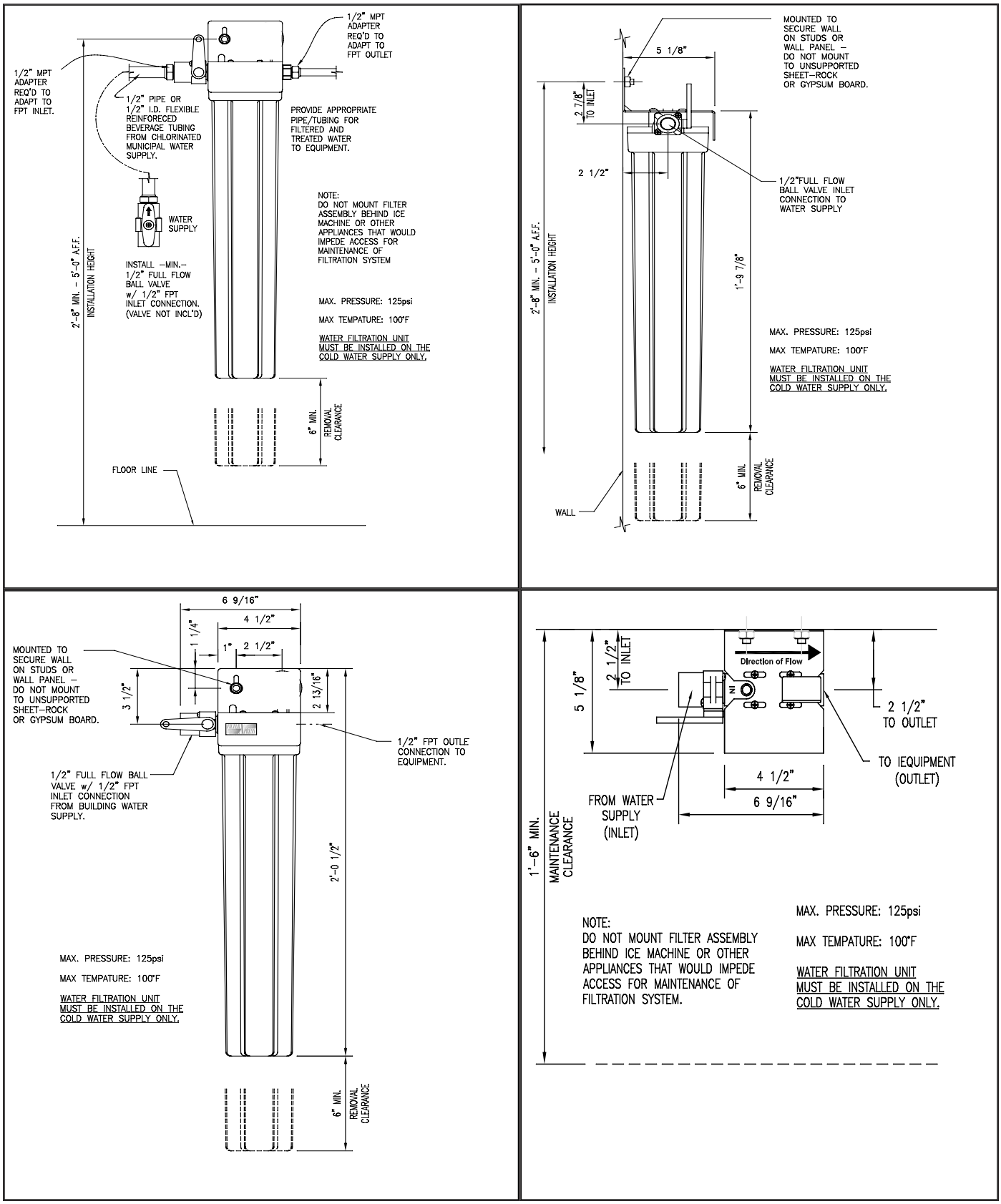

Operation

With adequate pressure, normal operation of the ScaleX2® System is completely automatic. Dependable operation involves only monitoring of outlet pressure, periodic filter changes and service documentation.

Maintenance

The only routine maintenance your ScaleX2® System should ever require is periodic filter cartridge changes or replacement sump O-rings. Filter changes are necessary for optimum performance of your foodservice equipment. If the system sizing recommendations have been followed the ScaleX2® System is designed to provide a twelve (12) month filter replacement interval on most tap water.

Filter Change Frequency

Several situations will mandate filter changes. Complete filter sets should be changed when any of the following apply:

- Twelve (12) Months have passed since unit installation or previous filter change.
- Reduced water flow.

If filter change frequency is less than 12 months due to pressure drop, it may be necessary to add additional prefiltration or evaluate system sizing recommendations.

Filter Cartridge Replacement Procedure

IMPORTANT: Determine whether all equipment connected to the ScaleX2® System must be turned off prior to shutting off water supply from filters.

1. If required, turn off equipment.
2. Turn OFF water to ScaleX2® System by closing Inlet Ball Valve.
3. Press the red button to release pressure.
4. Remove housing(s) - use filter wrench if necessary.
5. Clean inside of housing sumps with warm water. If desired, disinfect housings using a teaspoon of household bleach in a filter bowl of water. Let stand 5 minutes, and then discard.
6. Insert new cartridges into filter housings. Match cartridge model numbers to model numbers on bracket.
7. Make certain the O-ring is properly positioned and reinstall filter housings (hand tighten only). Check O-ring for damage and replace if damaged or distorted.
8. Slightly open the inlet ball valve; push the red pressure relief button to release trapped air until a small amount of water comes out - release the red button and fully open the ball valve.
9. Open the flush valve downline from the filter housing (if equipped) and flush the new cartridges to drain or bucket for five (5) minutes or until water runs clear. If no flush valve is present, disconnect line from equipment to flush to drain.
10. VERY IMPORTANT: With water supply inlet valve OPEN and water flow confirmed, turn on connected equipment. Failure to supply water to equipment may cause serious damage.
11. Record filter change on the service log or at FilterTrak.

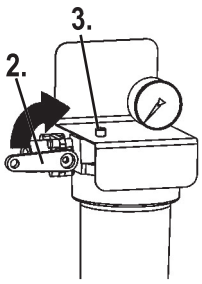

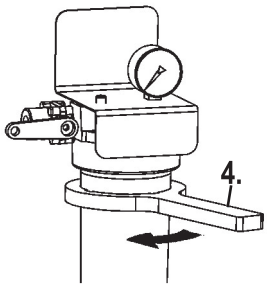

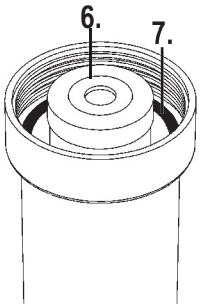

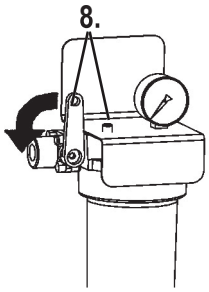

Replacement Filter Cartridges

OptiPure Filter Systems are designed, tested, and certified with FilterXpress filter cartridges with proven performance, size and operating capacities. Use of replacement cartridges other than those specified will void warranties, certifications and may compromise equipment protection, water quality and cartridge life.

Replacement Parts for: SX2-12

Drawing ID #	Part #	Description
1	600-10059	Housing, w/Gauge Port & PR
1a	600-99008	O-Ring - 6 pak
1b	600-90017	Sump Only
2	252-60210	SCLX2-2 Replacement Cartridge
3	520-12055	Valve, Inlet Ball 1/2”
4	590-02005	Bracket, SS Single 1/2” Housing
5	800-00221	Screw #10 x 3/4” SS
	600-99007	Wrench, Housing
	600-99205	Pressure Relief Button Kit

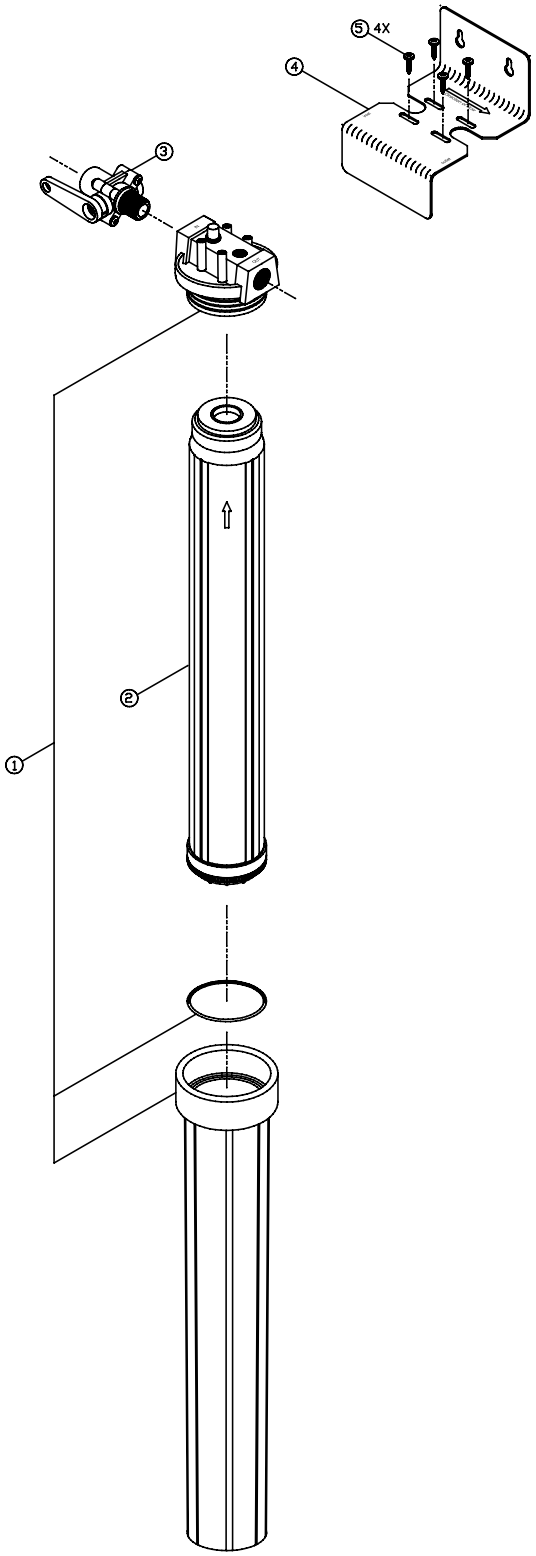

NSF COMPONENT

The ScaleX2® Filter Cartridge in the SX2-12 is Tested and Certified by NSF Interntaional against NSF/ANSI Standard 42 for materials and structural integrity requirements only.

NOTE: Testing was performed under standard laboratory conditions, actual performance may vary. It is recommended that you have your water supply tested to determine your actual water treatment requirements.

Questions, Problems or Assistance?
Call, email or write to:

FilterXpress div. of Procam Controls, Inc.
2605 Technology Dr. Bldg. 300 Plano, TX 75074 USA
P: 972.881.9797 F: 972.422.6262 www.optipurewater.com

©2006 Procam Controls, Inc.