Manitowoc

Foodservice

Parts Manual

For more Parts Information:
https://manitowocfsg.sysonline.com/Default.aspx

TABLE OF CONTENTS

Manitowoc Foodservice [Updated: Sep. 30, 2013]
Manitowoc - Ice & Related
Parts Catalog
Ice Machine
RNS Series
RNS Model - CounterTop
RNS12, RNS20
RNS012 RNS020 Control Box 1
RNS012 RNS020 Evaporator Assembly 3
RNS012 RNS020 Refrigeration Compartment - View 1 6
RNS012 RNS020 Refrigeration Compartment - View 2 9
RNS012 RNS020 - Air-cooled Compartment 12
RNS012 RNS020 Panels 14

RNS012 RNS020 CONTROL BOX

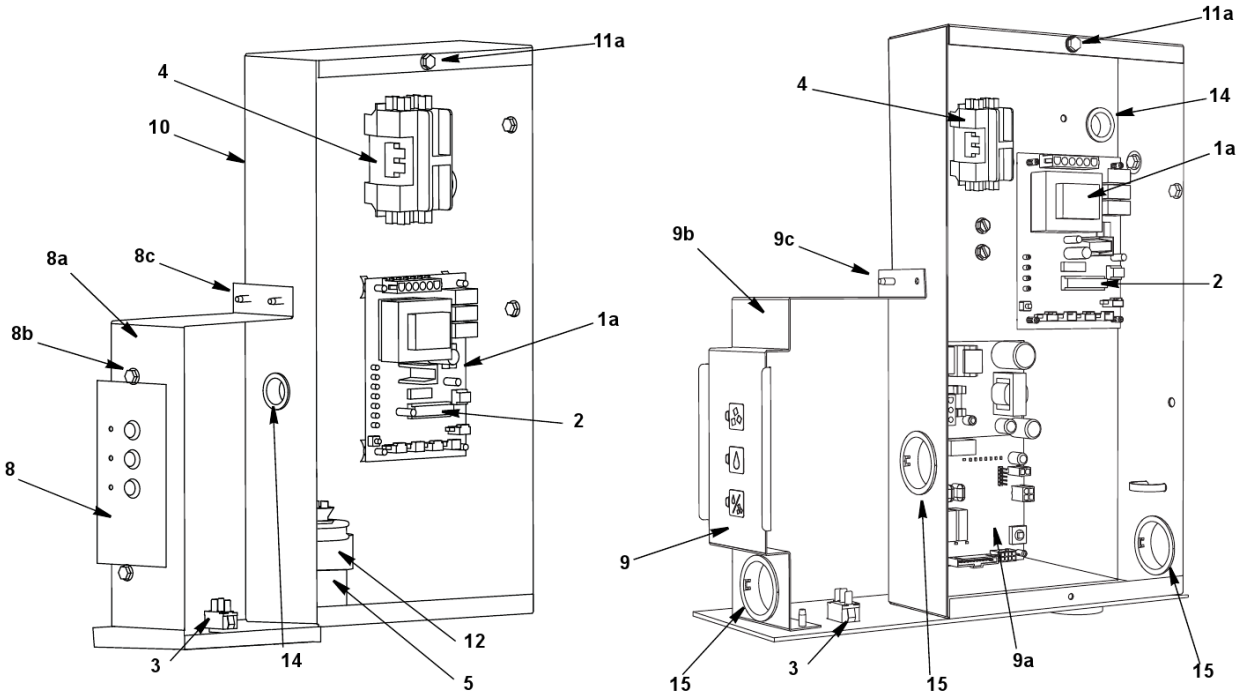

RNS012 RNS020 CONTROL BOX

#	PART #	DESCRIPTION	QTY	Note
1	000001238	Control Board		
1a	4302253	Control Board Mounting Supports		
2	2511493	10 Amp Fuse		
3	2007939	Toggle Switch		
3a	2009873	Toggle Switch Wiring Harness		
4		Contactor		
4a	2006589	Contactor - 115V/60 Hz/1 Ph		
4b	2006599	Contactor - 230V/50-60 Hz/1 Ph		
5		Gearmotor Run Capacitor		
5a	000007825	Gearmotor Capacitor - 115V/60 Hz/1 Ph		
5b	000007824	Gearmotor Capacitor - 230V/50 Hz/1 Ph		
6	000010862	Boost Transformer		
7	000008274	Wiring Harness - Power		
8	2009523	Selector Switch		[1]
8a	6067221	Bracket - Selector Switch		
8b	5012319	Screw - #12-16 x 0.75"		
8c	5202069	Screw - #10-24 x 0.50" HEX		
8d	2009723	Wiring Harness - Selector Switch		
9	000010742	Touch Pad Selector		[2]
9a	000010745	Control Board - Touch Pad		
9b	000010750	Bracket - Touch Pad		
9c	5202069	Screw - #10-24 x 0.50" HEX		
10	000008461	Control Box		
11	000000734	Control Box Cover		
11a	5202069	Screw - #10-24 x 0.50" HEX		
12	6024953	Capacitor Mounting Strap		
13	5202109	Screw - #10-24 x 0.375"		
14	2501409	Bushing - 0.875"		
15	2500139	Bushing - 1.5"		

PART NOTES:

[1] - Manufactured Before 01/2013

[2] - Manufactured After 01/2013

RNS012 RNS020 EVAPORATOR ASSEMBLY

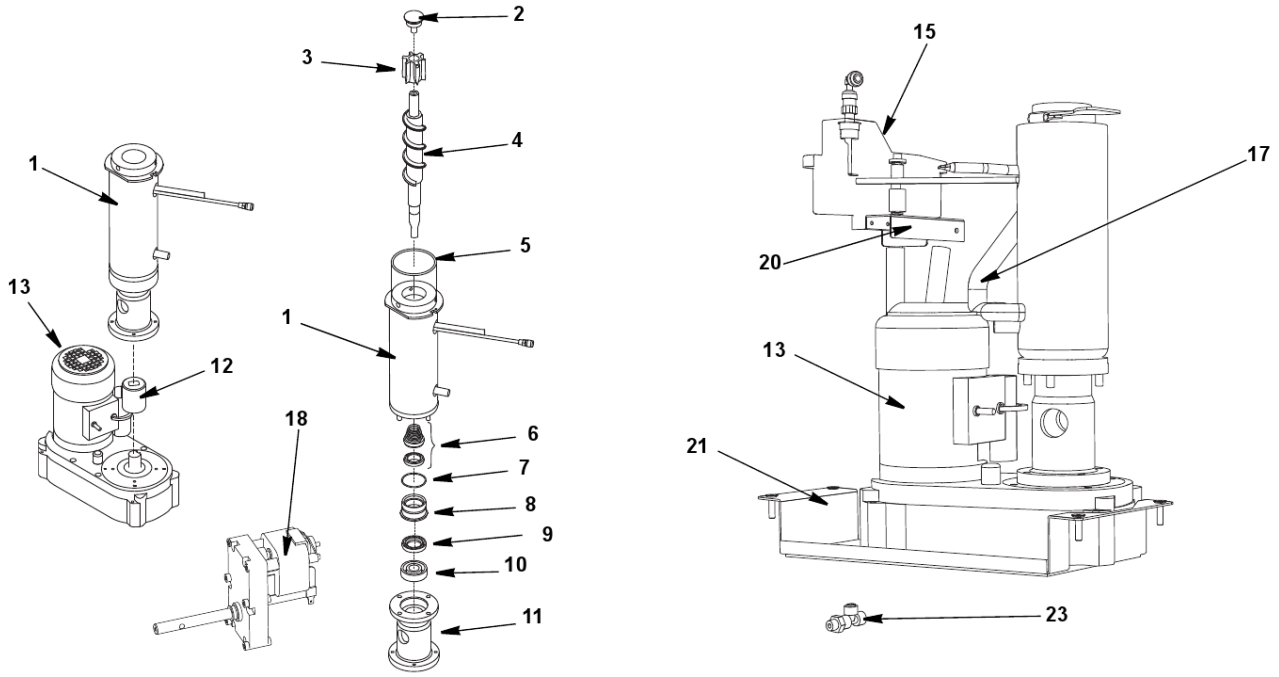

RNS012 RNS020 EVAPORATOR ASSEMBLY

#	PART #	DESCRIPTION	QTY	Note
1		Evaporator Assembly		
1a	000008357	Entire Evaporator Assembly		
1b	000004018	Cutter Head/Upper Bearing Assembly		
2	000008347	Ice Wiper Stud		
3	000009158	Extruder with bushing		
4	000008349	Auger		
5	000008350	OR Gasket		
6	000006426	Water Seal		
7	000005583	O-ring Gasket		
8	000005782	Water Seal Retainer		
9	000008354	Seal Ring		
10	000008355	Bearing		
11	000008356	Foundation		
12	000008358	Joint		
13		Gear Box/Motor Assembly		
13a	000011126	Gearmotor Assembly - 115V/60 Hz/1 Ph		
13b	000005697	Gearmotor Assembly - 208-230V/50-60 Hz/1 Ph		
13c	000008631	Wiring Harness		
14	000006516	Float Chamber Assembly		[1]
14a	2008633	Float Switch Only		
14b	000006515	Float Chamber Only		
15		Water Dispense Valve		
15a	2009093	Water Dispense Valve - 115V/60 Hz/1 Ph		
15b	2009103	Water Dispense Valve - 230V/50 Hz/1 Ph		
15c	5002943	Elbow 3/8 x 1/4		
15d	000001180	Speed fit		
15e	000000469	Fitting		
16	000008205	Molded Vinyl Tube		
17		Dispenser Motor		
17a	000002191	Dispenser Motor - 115V/60 Hz/1 Ph		
17b	000002192	Dispenser Motor - 230V/60 Hz/1 Ph		
18		Dispenser Motor Mounting		
18a	000007423	Bracket		
18b	5003383	Screw		
18c	5573209	Star Washer		
19	6066101	Float Valve Bracket		
19a	5202069	Screw - #10-24 x 0.50" HEX		
19b	5650729	Compression Nut		
20	000008007	Gearmotor Mounting Base		
21		Evaporator Mounting to Bracket		
21a	6069201	Bracket		
21b	5005423	Bolt		

RNS012 RNS020 EVAPORATOR ASSEMBLY

#	PART #	DESCRIPTION	QTY	Note
21c	5573059	Mounting - Flatwasher		
21d	5573139	Mounting - Lockwasher		
22		Evaporator Mounting to Gear Motor		
22a	5005653	Bolt		
22b	5005663	Flatwasher		
22c	5005673	Lockwasher		
22d	5202069	Screw - #10-24 x 0.50" HEX		
23	5650649	Hose Clamp - 0.759"/0.848" ID		
24	2009483	Swivel Tee Male		

PART NOTES:

[1] - includes float, switch, cover & housing

RNS012 RNS020 REFRIGERATION COMPARTMENT - VIEW 1

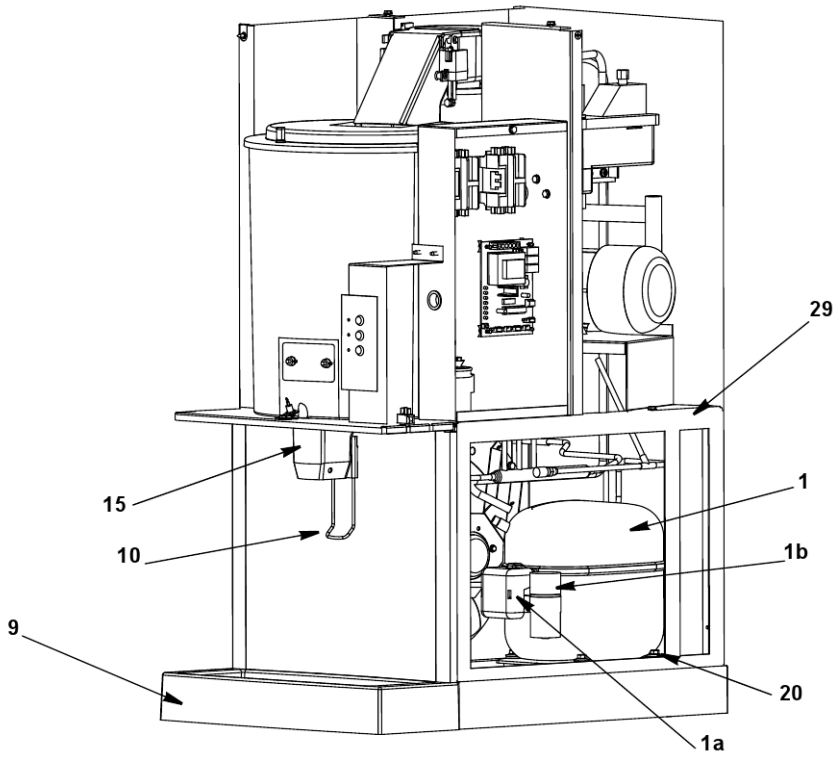

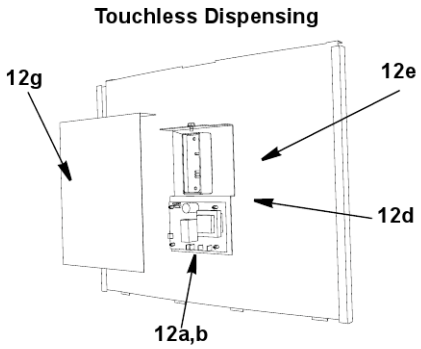

RNS012 RNS020 REFRIGERATION COMPARTMENT - VIEW 1

#	PART #	DESCRIPTION	QTY	Note
1	7601323	Compressor - Danfoss - 115V/60 Hz/1 Ph		
1a	2002043	Current Relay with Overload - 115V/60 Hz/1 Ph		
1b	2002033	Start Capacitor - 115V/60 Hz/1 Ph		
1	7601333	Compressor - Danfoss - 230V/50 Hz/1 Ph		
1a	2004873	Current Relay with Overload - 230V/50 Hz/1 Ph		
1b	2004863	Start Capacitor - 230V/50 Hz/1 Ph		
2		Water Dump Valve		
2a	000007429	Water Dump Valve 115V		
2b	000007428	Water Dump Valve 208-240V		
3	000010515	Expansion Valve		
4	000010676	Expansion Valve Body Insulation Boot		
5	2001243	High Pressure Cut-out Control		
6	000004012	Low Pressure Switch		
7	8310233	Manifold Strainer		
8	8930259	Drier		
9	4013423	Drain Tray		
9a	3006573	Grill/Wire Drain Tray Rack		
10	4014783	Dispenser Arm		
11	6068631	Lever Bracket		
12		Touch Less Dispensing		
12a	000000308	Control Board - 115V/60 Hz/1 Ph		
12b	000000186	Control Board - 230V/50 Hz/1 Ph		
12c	000000187	Control Board Support		
12d	000008173	Sensor Block Assembly		
12e	000000185	Bracket		
12f	000000332	Screw		
12g	000000580	Mylar Shield		
13	000000310	Wiring Harness - Touchless Dispensing		
14	2009463	Blue LED Light		
15	000002247	Ice Dispense Chute		
16	2009453	Momentary Switch		
17	5000673	Coupling Male Reducing 3/8" x 1/4"		
18	9000853	Water Dispense Tubing - 21.5"		
19	8373253	Access Valve		
20		Compressor Mounting		
20a	5004203	Mounting - Grommet		
20b	5000939	Screw		
20c	5004213	Sleeve		
20d	5000979	Washer		
20e	2512043	Strain Relief Bushing		
21	8706093	Female Wing Adapter - 0.375"		
21a	5202069	Screw - #10-24 x 0.50" HEX		

RNS012 RNS020 REFRIGERATION COMPARTMENT - VIEW 1

#	PART #	DESCRIPTION	QTY	Note
22	2009483	Swivel Tee Male		
23	4420291	Vinyl Tube - 0.25" OD		
24	6039081	Water Inlet Tubing Insulation		
25	2500139	Bushing - 1.5"		
26	2512043	Strain Relief Bushing		
26a	000000081	Power Cord		
26b	000000082	Power Cord - 230V/50 Hz		
27	6066241	Water Dump Valve Bracket		
27a	5202329	Screw - #10-24 x 0.25" PH		
28		Drain Tray		
28a	4015853	Vinyl Tube		
28b	5650663	Clamp - 1.218 x 1.405		
29		Support Bracket		
29a	000006716	Support Bracket - RNS12		
29b	000008004	Support Bracket - RNS20		
30		Suction Line		
30a	000010517	Suction Line - RNS12		
30b	000010518	Suction Line - RNS20		
31		Liquid Line		
31a	000008458	Liquid Line - RNS12		
31b	000008196	Liquid Line - RNS20		

RNS012 RNS020 REFRIGERATION COMPARTMENT - VIEW 2

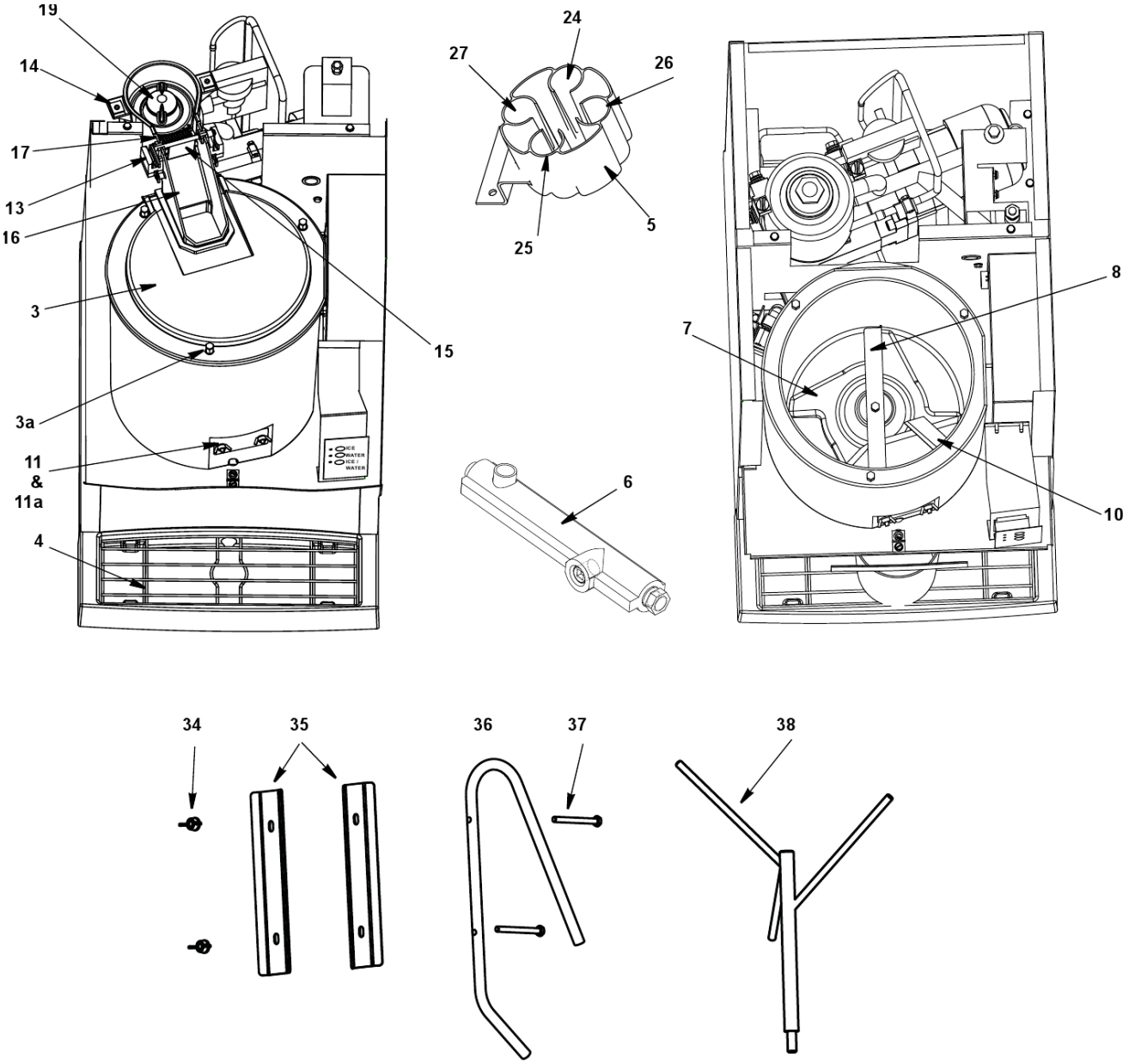

RNS012 RNS020 REFRIGERATION COMPARTMENT - VIEW 2

#	PART #	DESCRIPTION	QTY	Note
1		Bin Liner		
1a	4013313	Bin Liner RNS012		
1b	4015023	Bin Liner RNS020		
2	5005623	Bottom Adapter		[1]
3	4014453	Cover		
3a	5305123	Thumbscrew SS - #8-32 x 0.44"		
4	3006573	Grill/Wire Drain Tray Rack		
5	4015073	Four into One Drain		
5a	5202069	Screw - #10-24 x 0.50" HEX		
6	6072021	Interchangeable Drain Tube		
7	000002201	Dispense Wheel		
7a	5005523	Thumbscrew		
8	000002203	Agitator Bar		
8a	000000325	Washer		
8b	000002243	O-ring		
9	5005823	Drive Pin		
10	4015533	Ice Deflector		
11	6069031	Support Plate		
11a	5005503	Wingnut		
12	2009793	Hall Effect Switch with Wiring		
13	2009803	Hall Effect Switch Housing		
13a	5121629	Screw		
14	5650853	Receptacle		
14a	5000453	Wing-head Mounting Stud		
15	4014443	Damper Door Nugget		
16	4013363	Ice Chute		
17	4014883	Strainer Ramp		
18	4013463	Chute Cover - sits on receptacle		
19	000002062	Ice Wiper - Nugget		
20	5005523	Thumbscrew		[2]
21		Dispenser Motor		
21a	000002191	Dispenser Motor - 115V/60 Hz/1 Ph		
21b	000002192	Dispenser Motor - 230V/60 Hz/1 Ph		
21c	000002245	Thumbscrew		
21d	000000325	Washer		
22		Secure Ice Chute to Evaporator		
22a	000000464	Clamp Assembly		
22b	000005183	Clamp Seal		
23		Secure Dispenser Motor to Bin		
23a	5573209	Star Washer		
23b	5202069	Screw - #10-24 x 0.50" HEX		
		RNS12 Tubing		[3]

RNS012 RNS020 REFRIGERATION COMPARTMENT - VIEW 2

#	PART #	DESCRIPTION	QTY	Note
24	4420383	Clear Tubing - 0.625" ID		
25	4420383	Clear Tubing - 0.625" ID		
26	4015763	Float Overflow		
27	4420383	Clear Tubing - 0.625" ID		
28	5650609	Snap Clamp - 1.0" ID		
		RNS20 Tubing		[3]
29	4420383	Clear Tubing - 0.625" ID		
30	4420383	Clear Tubing - 0.625" ID		
31	4015943	Float Overflow		
32	4420383	Clear Tubing - 0.625" ID		
33	5650609	Snap Clamp - 1.0" ID		
		RNS20 Model Only		
34	5005503	Wingnut		[4]
35	000002198	Ice Breaker Mounting Bracket		[5]
36	000002197	Ice Breaker		[4]
37	000002244	Mounting Bolts		[4]
38	000002196	Upright Agitator Bar		[4]
39		Upright Agitator Bar - Obsolete - Replaced by Kit		
39a	000002776	Upright Agitator Bar 115V/60 Hz/1 Ph		[4]
39b	000002777	Upright Agitator Bar 230V/60 Hz/1 Ph		[4]

PART NOTES:

[1] - 1/2 N.P.T. x 1/2 Barbed
[2] - RNS12 Only
[3] - (four in one drain)
[4] - RNS20 Model Only
[5] - (1 piece)
RNS20 Model Only

RNS012 RNS020 - AIR-COOLED COMPARTMENT

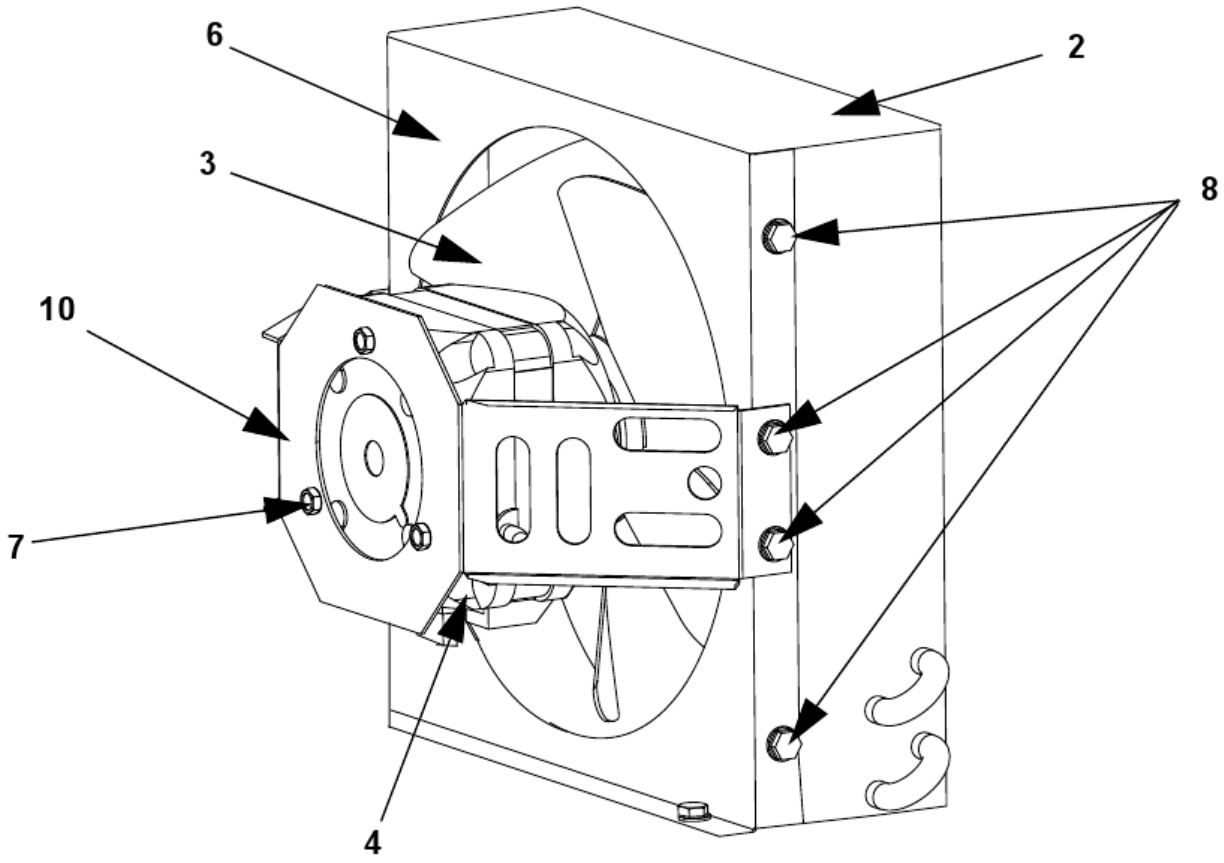

RNS012 RNS020 - AIR-COOLED COMPARTMENT

#	PART #	DESCRIPTION	QTY	Note
1		Compressor		[1]
2	8252859	Air Condenser		
3	2416223	Fan Blade		
4		Fan Motor		
4a	000006656	Fan Motor - 115V/60 Hz/1 Ph		
4b	2412823	Fan Motor - 208-230V/50-60 Hz		
5	2001263	Fan Cycling Control - 200-250 psig		[2]
6	6065801	Fan Shroud		
7	5005513	Screw 0.7 x 8 mm		
8	5202069	Screw - #10-24 x 0.50" HEX		
9	5475079	Speed Nut - 0.25" x 20		
10	000000409	Fan Motor Bracket		

PART NOTES:

[1] - Refer to COMMON PARTS PAGE

[2] - \pages from 200126_09.jpg" width=150 height=306>

RNS012 RNS020 PANELS

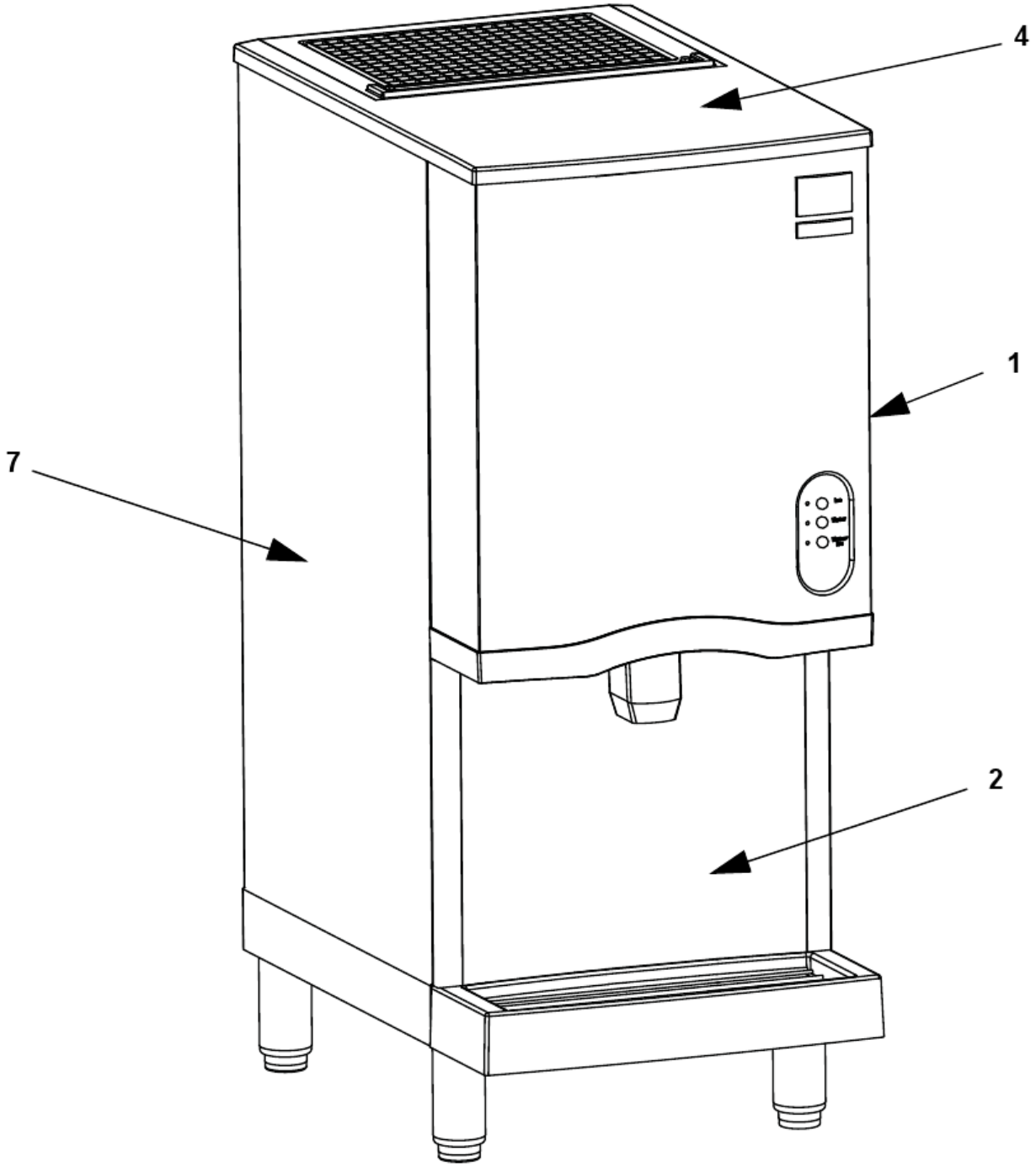

RNS012 RNS020 PANELS

#	PART #	DESCRIPTION	QTY	Note
1		Front Panel Assembly		
1a	6068241	RNS12 Front Panel Assembly		
1b	6070801	RNS20 Front Panel Assembly		
2	6068481	Lever Activated - Lower Front Panel		
2a		Touchless - Lower Front Panel		
2b	000000338	Touchless - Lower Front Panel Assembly 115V/60 Hz/1 Ph		
2c	000000383	Touchless - Lower Front Panel Assembly 230V/60 Hz/1 Ph		
2d	000000645	Front Panel Label		
3	8251713	Air Filter		
4	4014463	Top Cover		
5		Back Panel		
5a	6068151	RNS12 Back Panel		
5b	6071361	RNS20 Back Panel		
6		Right Side Panel - Non-Louvered		
6a	000008006	RNS12 - Right Side Panel - Non-Louvered		
6b	6070821	RNS20 - Right Side Panel - Non-Louvered		
7		Left Side Panel - Louvered		
	000008005	RNS12 - Left Side Panel - Louvered		
7b	6071291	Left Side Panel - Louvered		
8	5202069	Screw - #10-24 x 0.50" HEX		[1]
9	000000458	Thumbscrew		[2]
10	5005573	Side Panel Screws		
11	000000741	Side Panel Nuts		
12	5012349	Screws		[3]
13	5202099	Screw - #10-24 x 0.50" PHIL		
14	4014703	Front Panel Top End Cap		
15	5012349	Screws		
16		Cartoning		
16a	000002781	Cartoning		[4]
16b	000011198	Cartoning		[5]

PART NOTES:

[1] - mounts back panel
[2] - Top Cover
[3] - inside
[4] - RNS12
[5] - RNS20