Manitowoc

Foodservice

Parts Manual

For more Parts Information:
https://manitowocfsg.sysonline.com/Default.aspx

TABLE OF CONTENTS

Manitowoc Foodservice [Updated: Sep. 30, 2013]
Manitowoc - Ice & Related
Parts Catalog
Ice Machine
RN Series
RN Model - Air & Water
RN1000
RN1000 Control Box 1
RN1000 Evaporator Compartment 3
RN1000 Common Components 6
RN1000 Refrigeration Compartment - Air-cooled 8
RN1000 Refrigeration Compartment - Water-cooled 10
RN1000 Panels 12

RN1000

RN1000 CONTROL BOX

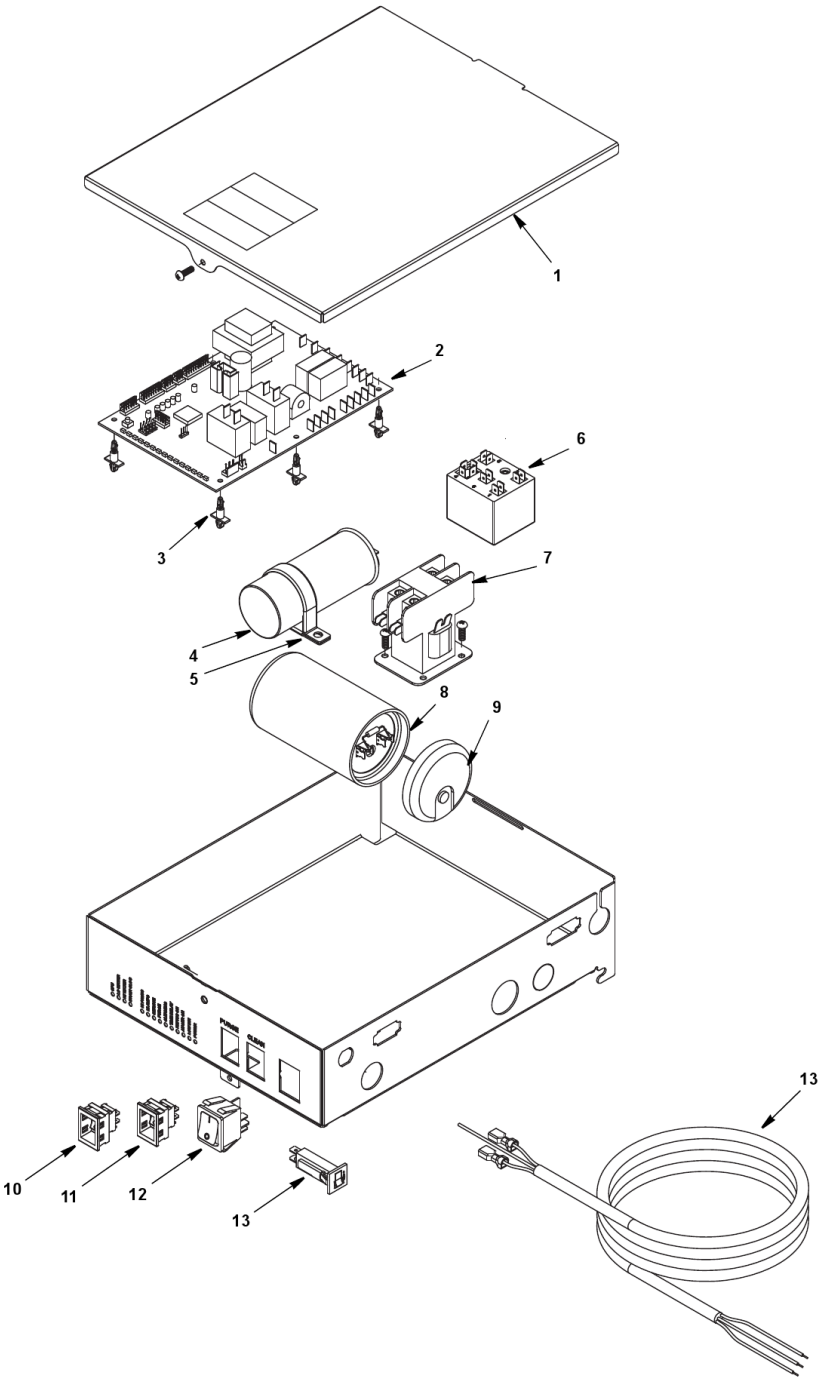

RN1000 CONTROL BOX

#	PART #	DESCRIPTION	QTY	Note
1	000007291	Cover, electrical box, air/water-cooled		
1	000007401	Cover, electrical box, remote		
2	000007292	Control Board - 240V		[1]
3	000007293	Stand offs		[2]
4	000007294	Capacitor, compressor run		
5	000007295	Clamp, Run Capacitor		
6	000007296	Start Relay		[3]
7	000007297	Contactor		
8	000007298	Compressor Start Capacitor		
9	000007299	Cap - Capacitor		
10	000007301	Switch, Evaporator Purge		
11	000007302	Switch, Evaporator Clean		
12	000007303	Switch, Ice Machine Power		
13	000007304	Circuit Breaker - 4 amp		
13	000007305	Power Cord - 240V		

PART NOTES:

[1] - includes 000007293
[2] - set of 6
[3] - includes wire harness

RN1000 EVAPORATOR COMPARTMENT

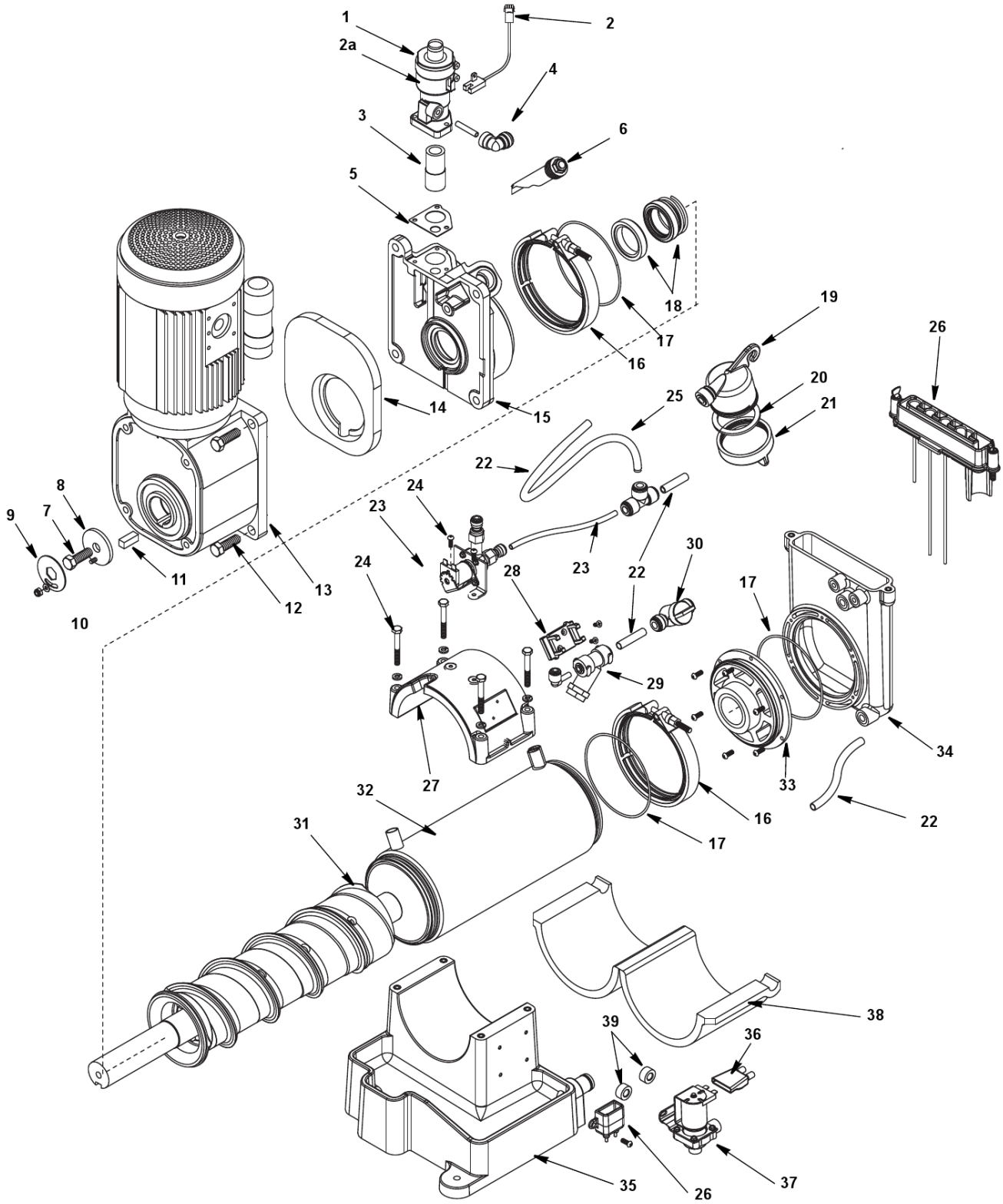

RN1000 EVAPORATOR COMPARTMENT

#	PART #	DESCRIPTION	QTY	Note
1	000007197	Shuttle Assembly		[1]
2	000007198	Optical Switch		
3	000007199	Compression Nozzle		
4	000007200	Water Elbow		
5	000007201	Shuttle Gasket		
6	000007202	Stream Divider		
7	000007204	Auger Bolt		
8	000007205	Auger Washer		
9	000007206	Auger Retainer		
10	000007207	Auger Bolt Kit		[2]
11	000007208	Auger Key		
12	000007209	Mounting Bolt		
13	000007210	Gearmotor - 240V		[3]
14	000007211	Gearmotor Gasket		
15	000007212	Main Housing		[4]
16	000007213	Coupling, V-band		
17	000007214	O-ring		
18	000007215	Seal - Auger Shaft		
19	000007216	Sanitizer Cup		
20	000007217	Gasket, Sanitizer		
21	000007218	Cap, Sanitizer		[5]
22	000007219	Water Tubing - 0.375" OD		
23	000007220	Water Tubing - 0.25" OD		
24	000007221	Hardware - Mounting Evaporator Cap		
24	000007224	Solenoid, Water Feed		[6]
25	000007225	Water Tee		
26	000007226	Sensor Assembly, Water Level and Drain Clog		
27	000007227	Evaporator Cap		[7]
28	000007228	Clip, Water Shut-off Valve		
29	000007229	Water Strainer		
30	000007230	Water Shut-off Valve		
31	000007231	Auger		[4]
32	000007232	Evaporator		[8]
33	000007243	Journal Housing and Bearing		[9]
34	000007244	Water Reservoir		
35	000007245	Evaporator Base		
36	000007246	Boot - Solenoid		
37	000007247	Purge Solenoid		[6]
38	000007248	Insulation - Evaporator		
39	000007249	Solenoid Spacers		
40	000007250	Insulation, Evaporator Cap		
41	000007251	Condensate Pan		

RN1000 EVAPORATOR COMPARTMENT

#	PART #	DESCRIPTION	QTY	Note

PART NOTES:

[1] - includes 000007201
[2] - auger bolt, washer, retainer, nut and washer
[3] - includes capacitor
[4] - includes 000007215 & 000007214
[5] - includes 000007217
[6] - 240V
[7] - includes 000007250 & 000007221
[8] - includes 000007215 & 2 000007214
[9] - includes 2 000007214

RN1000 COMMON COMPONENTS

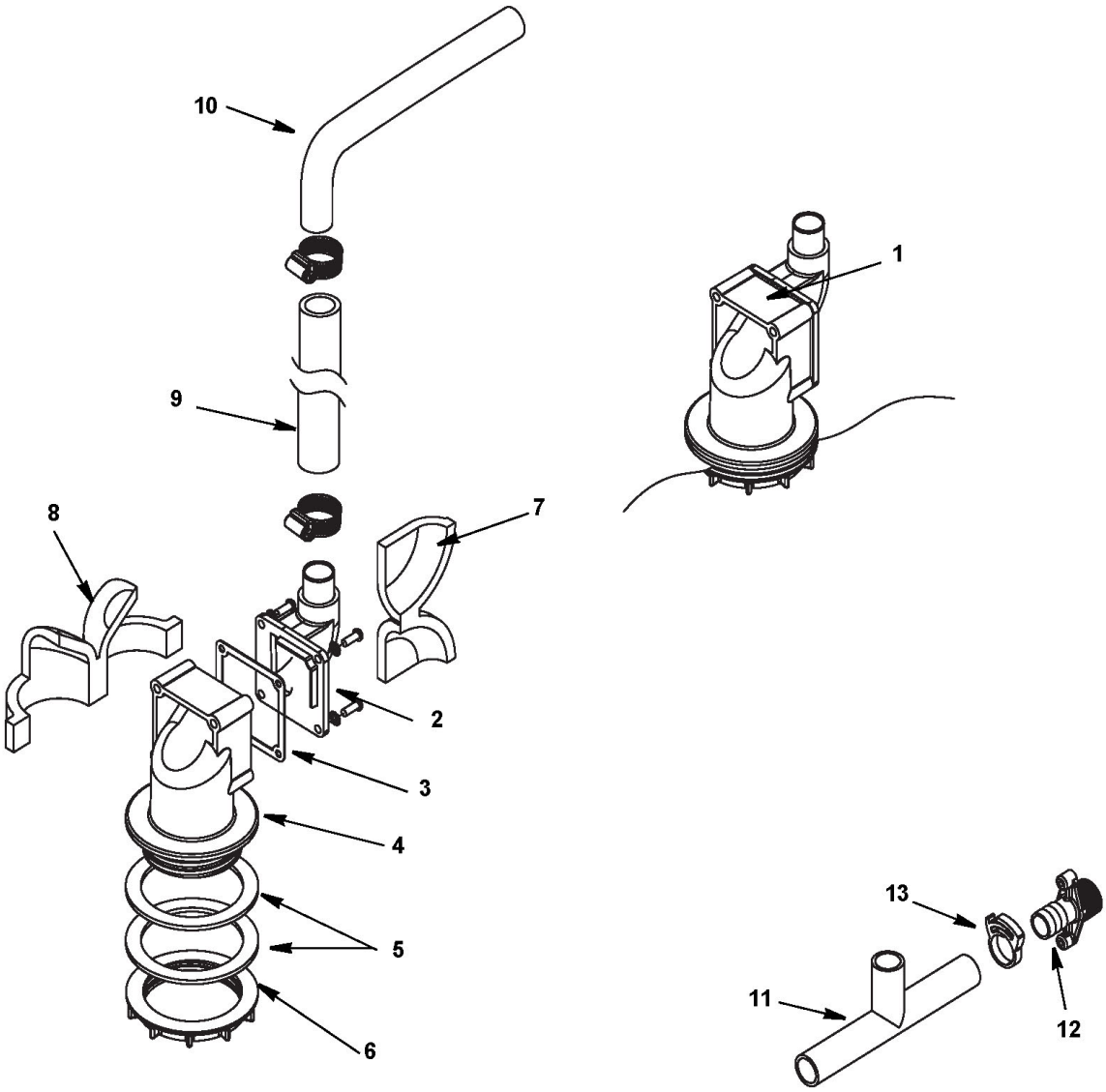

RN1000 COMMON COMPONENTS

#	PART #	DESCRIPTION	QTY	Note
1	000007307	Shuttle Actuator		
2	000007309	Actuator Elbow		[1]
3	000007311	Gasket		
4	000007312	Actuator Body		
5	000007313	Gasket, Coupling		
6	000007319	Locking Ring		[2]
7	000007323	Insulation, Elbow		
8	000007324	Insulation, Actuator		
9	000007325	Ice Transport Tube - Top Mount 30"		
10	000007196	Ice Transport Tube		
11	000007363	Drain Tubing		
12	000007364	Drain Fitting		
13	000007375	Clamp - Drain Line		
14	000007365	Ice Making Water Inlet Fitting, Plastic		
15	000007355	Extension-fill Tube - 9"		[3]
16	000007356	Extension-fill Tube - 4"		[3]
17	K00417	Sani-Sponge Kit		[4]

PART NOTES:

[1] - includes gasket and fasteners
[2] - includes 000007313
[3] - Not shown - extends into bin/dispenser
[4] - Not shown - Sponges and push rod

RN1000 REFRIGERATION COMPARTMENT - AIR-COOLED

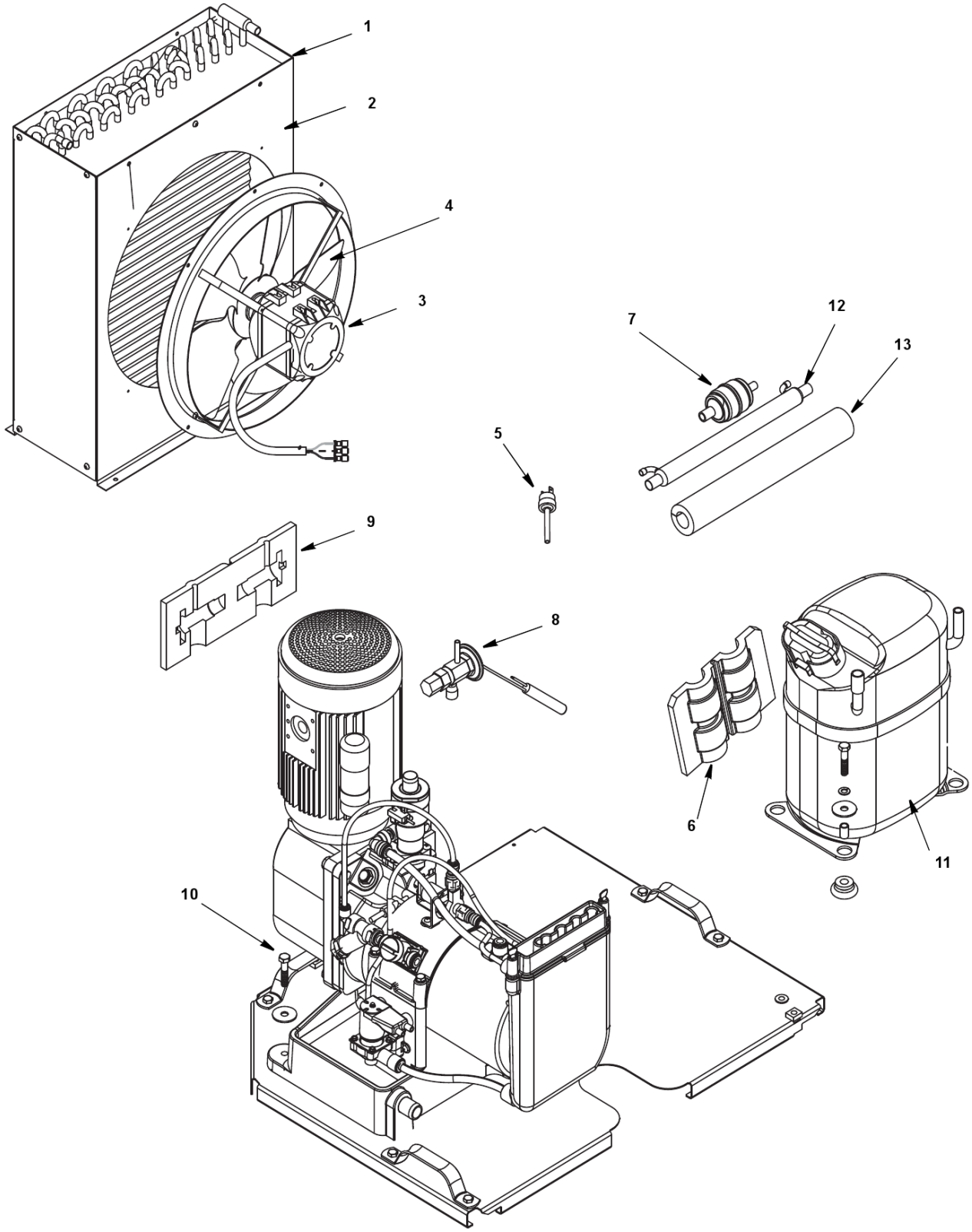

RN1000 REFRIGERATION COMPARTMENT - AIR-COOLED

#	PART #	DESCRIPTION	QTY	Note
1	000007253	Condenser		[1]
2	000007255	Condenser Shroud		
3	000007266	Fan Motor 230V/60 Hz/1 Ph		
4	000007286	Fan Blade		
5	000007268	High Pressure Cut-out		
6	000007269	Expansion Valve Bulb Insulation		
7	000007271	Drier		
8	000007273	Expansion Valve		
9	000007274	Expansion Valve Insulation		
10	000007275	Hardware, Evaporator Mounting Base		[2]
11	000007276	Compressor		
12	000007287	Heat Exchanger		[3]
13	000007289	Heat Exchanger Insulation		

PART NOTES:

[1] - includes 000007255
[2] - set of four
[3] - includes insulation

RN1000 REFRIGERATION COMPARTMENT - WATER-COOLED

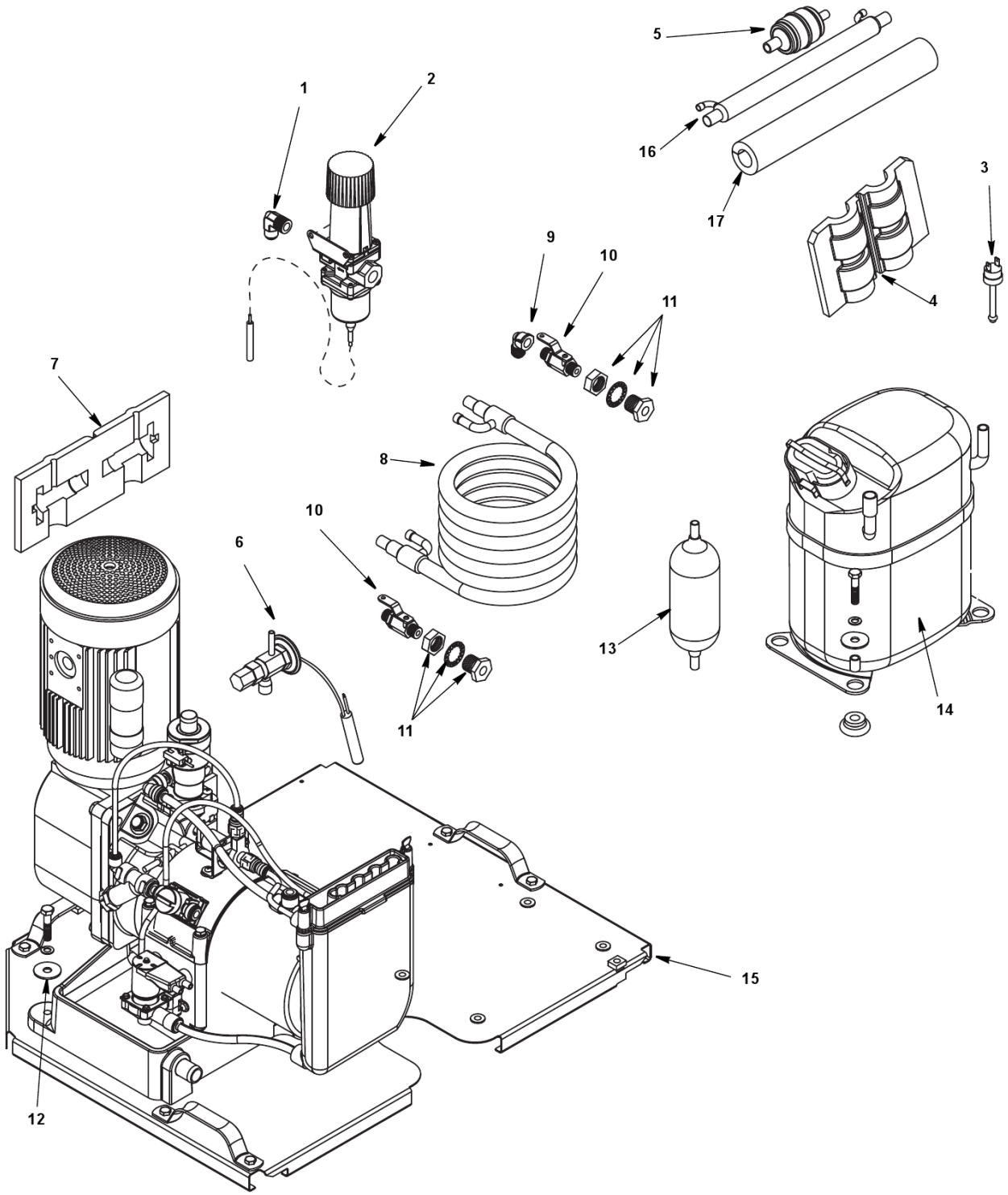

RN1000 REFRIGERATION COMPARTMENT - WATER-COOLED

#	PART #	DESCRIPTION	QTY	Note
1	000007381	Water Elbow		
2	000007382	Water Regulating Valve		
3	000007268	High Pressure Cut-out		
4	000007269	Expansion Valve Bulb Insulation		
5	000007270	Drier		
6	000007272	Expansion Valve		
7	000007274	Expansion Valve Insulation		
8	000007384	Water-cooled Condenser		
9	000007386	Water Elbow - 90°		
10	000007387	Water Shut-off Valve		
11	000007383	Water Union		
12	000007275	Hardware, Evaporator Mounting Base		
13	000007390	Receiver		
14	000007276	Compressor		
15	000007284	Ice Machine Base		
16	000007287	Heat Exchanger		[1]
17	000007289	Heat Exchanger Insulation		

PART NOTES:

[1] - includes insulation

RN1000 PANELS

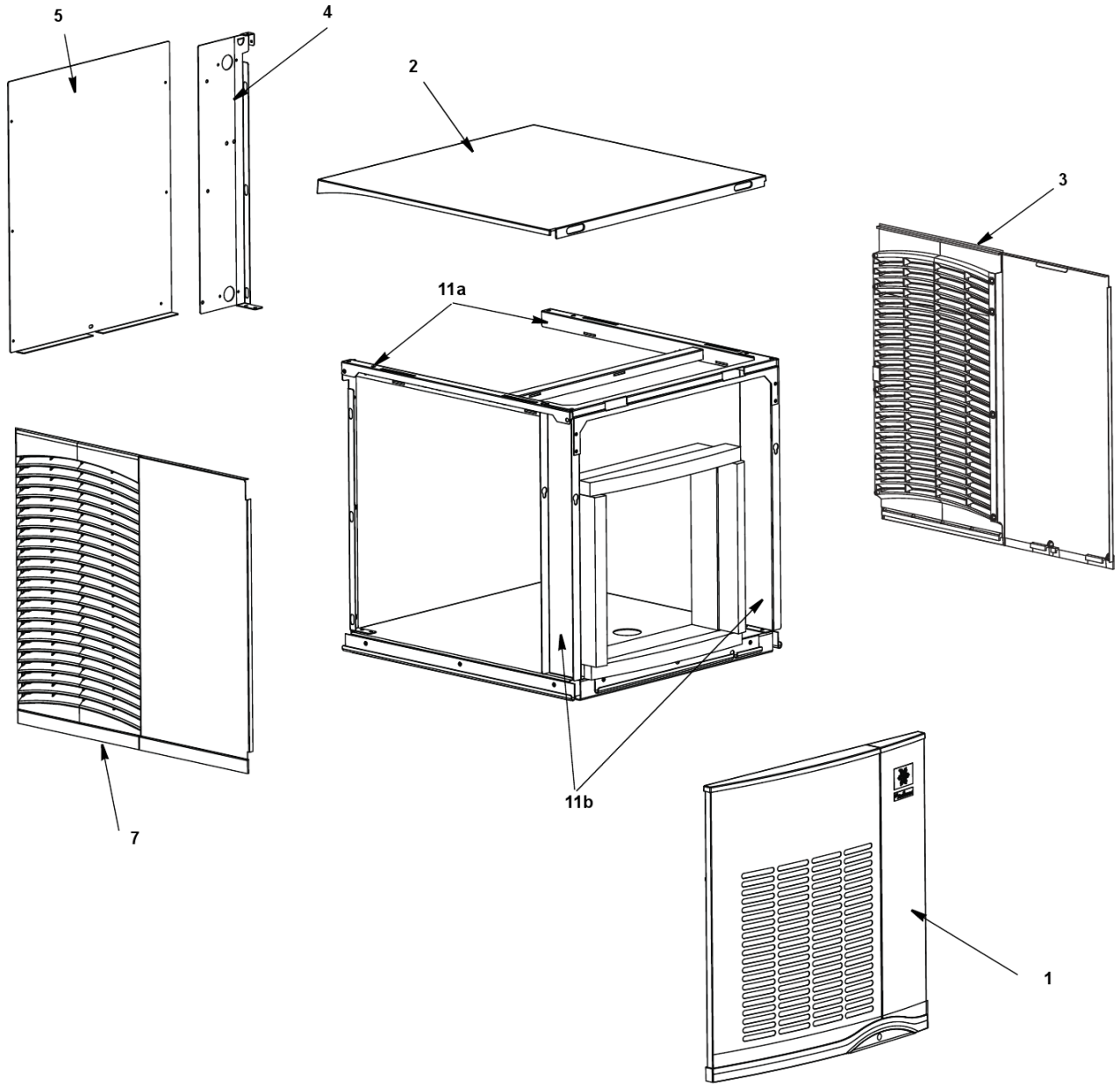

RN1000 PANELS

#	PART #	DESCRIPTION	QTY	Note
1	000006750	Front Panel		
2	000006751	Top Cover		
3	6060541	Right Side Panel		
4	6072361	Back Corner Channel Right		
5	000008371	Back Panel		
6	000007377	Bulkhead Connector Kit		
7	6060551	Left Side Panel		
8	000007985	Air Filter		
9	000007449	Air Filter Retaining Rod, PVC		
10		Return Packaging		
10a	000009086	Cartoning		
10b	000009087	Skid		
11		Supports		
11a	000009933	Upper Support		
11b	000009934	Front Support		