Manitowoc

Foodservice

Parts Manual

For more Parts Information:
https://manitowocfsg.sysonline.com/Default.aspx

TABLE OF CONTENTS

Manitowoc Foodservice [Updated: Sep. 30, 2013]
Manitowoc - Ice & Related
Parts Catalog
Ice Machine
RFS Series
RFS Model - Air & Water
RFS1200
RFS1200 Evaporator Assembly 1
RFS1200 Evaporator Compartment 3
RFS1200 Panels 6

RFS1200 EVAPORATOR ASSEMBLY

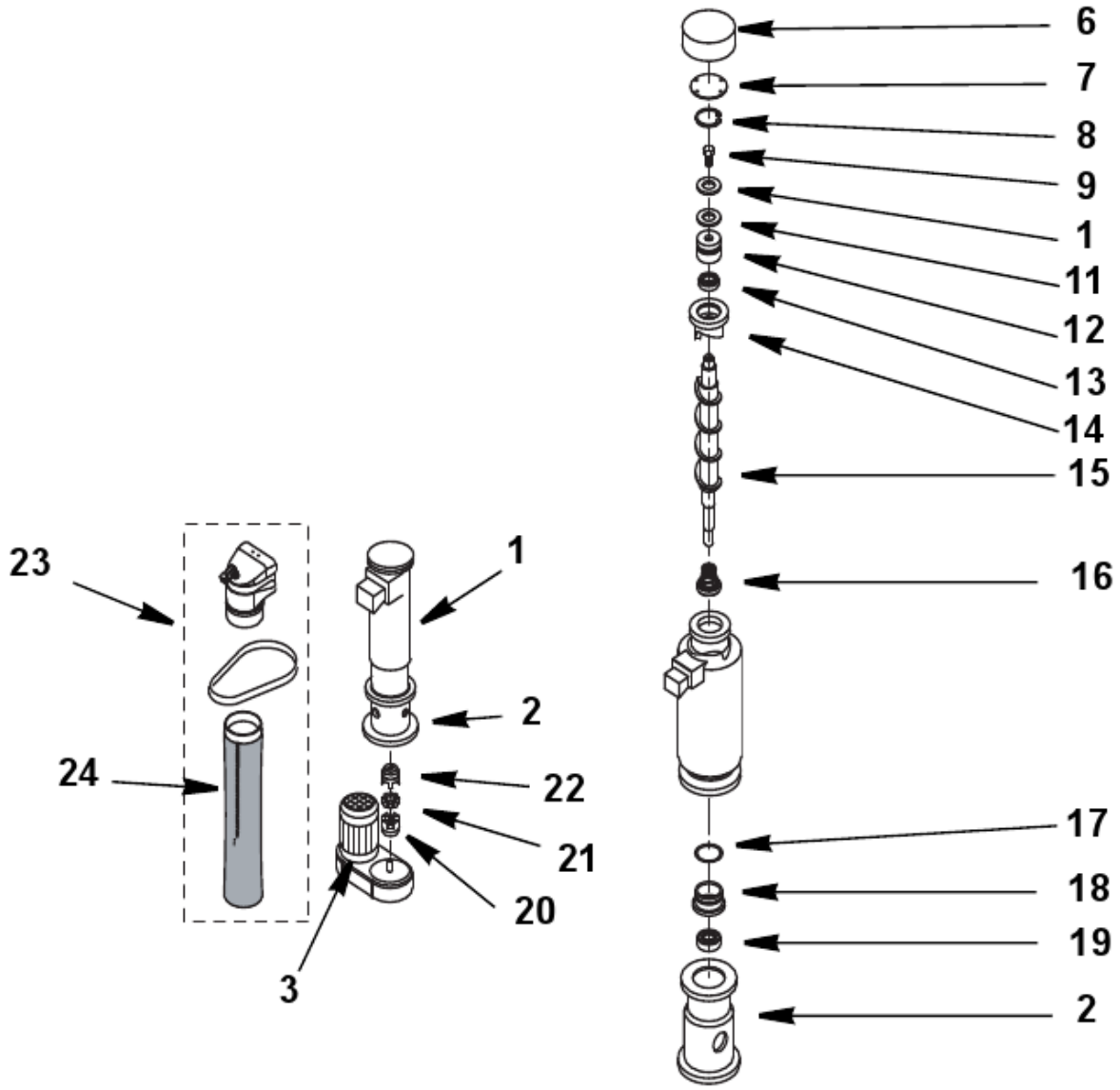

RFS1200 EVAPORATOR ASSEMBLY

#	PART #	DESCRIPTION	QTY	Note
1	000005682	Evaporator Assembly		
2	000005694	Foundation		
3		Gear Motor Assembly		
3a	000006064	Gearmotor Assembly - 220V/60 Hz/1 Ph		
3b	000005699	Gearmotor Assembly - 230V/50 Hz/1 Ph		
4		Gear Motor Capacitor		
4a	000007822	Gearmotor Capacitor - 230V/50 Hz/1 Ph		
4b	000007823	Gearmotor Capacitor - 220V/60 Hz/1 Ph		
5	000011883	Rotation Sensor		
6	000005732	Insulating Cap		
7	000005646	Bearing Cap		
8	000005758	Snap Ring		
9	000005600	Auger Bolt		
10	000005610	Bearing Shim		
11	000005651	Self Lubricating Disc		
12	000005606	Upper Bearing		
13	000005736	Upper O-ring		
14	000005649	Cutter Head		
15	000005597	Auger		
16	000005779	Water Seal		
17	000005582	Lower O-Ring		
18	000005780	Water Seal Retainer		
19	000005604	Lower Bearing		
20	000005643	Flex Jaw Coupling Lower		
21	000005644	Flex Jaw Coupling Spider		
22	000005571	Flex Jaw Coupling Upper		
23	000011624	Ice Chute with Bulb Holder and Bin Thermostat		
23	000011620	Ice Chute with Bulb Holder		
23	000007906	Ice Exhaust with Microswitch		
23	000011623	Bin Thermostat		[1]
23	000007918	Cross Bar		
23	000007907	Locking Strip		
23	000007919	Ice Chute Assembly		[2]
23	000007916	Bulb Holder		[2]
23	000007917	Ice Outlet Pipe Assembly		[2]
25	000008643	Ice Chute Extension		

PART NOTES:

[1] - Before Serial Number M05995632012 must order 000011624 (bin thermostat AND ice chute with bulb holder).

[2] - Discontinued

RFS1200 EVAPORATOR COMPARTMENT

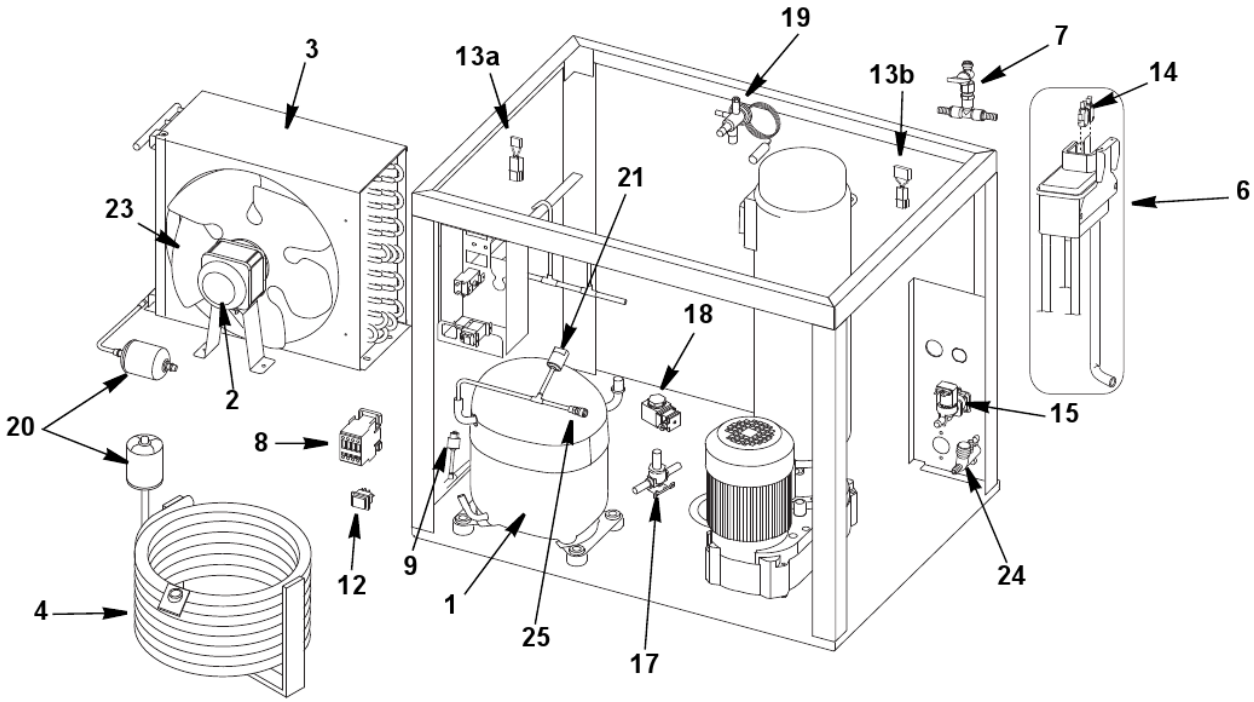

RFS1200 EVAPORATOR COMPARTMENT

#	PART #	DESCRIPTION	QTY	Note
1		Compressor		
1a	000009250	Compressor - 208-230V/60 Hz/1 Ph		
1b	000009254	Compressor - 230V/50 Hz/1 Ph		
1c	000010018	Compressor - 460V/50 Hz/3 Ph		
2		Condenser Fan Motor - See Note for Usage		
2a	000005579	Fan Motor - 208-230V/50-60 Hz/1 Ph		[1]
2b	000006085	Fan Motor - 208-230V/50-60 Hz/1 Ph		[2]
2c	000005574	Fan Motor - 208-230V/50-60 Hz/1 Ph		[3]
2d	000012281	Bracket - Fan Motor		
3	000005633	Air Condenser		
4	000008299	Water-cooled Condenser		
5	000008296	Water Regulating Valve		
6	000009251	Water Reservoir Assembly		[4]
6a	000005747	Water Reservoir Only		
7	000008552	Evaporator Drain Tap		
8		Compressor Contactor		
8a	000008462	Compressor Contactor - 208-230V/60 Hz/1 Ph		
8b	000005641	Compressor Contactor - 230V/50 Hz/1 Ph		
9	000006076	Low Pressure Safety Switch		
10	000005765	Bin Thermostat		[5]
11		Fan Cycle Control		
11a	000006060	Fan Cycle Control - 115-230V/50-60 Hz/1 Ph		
11b	000006191	Fan Cycle Control - 208-230V/50-60 Hz/1 Ph		
12	000005763	ON/OFF Rocker Switch		
13		Electronic Noise Reducer		[6]
13a	000005680	Electronic Noise Reducer		[7]
13b	000005678	Electronic Noise Reducer		[8]
14	000005760	Float Microswitch (each)		
15		Water Inlet Valve - Ice Making		
15a	000006058	Water Inlet Valve - 220V/60 Hz/1 Ph		
15b	000005770	Water Inlet Valve - 220-230V/50-60 Hz/1 Ph		
16		Water Inlet Valve - Additional for Water-cooled Condenser		
16a	000006050	Water Inlet Valve Water-cooled Condenser - 208-230V/60 Hz/1 Ph		
16b	000005639	Water Inlet Valve Water-cooled Condenser - 230V/50 Hz/1 Ph		
17	000006245	Harvest Valve		
18		Harvest Valve Coil		
18a	000008763	Valve Coil - 60 Hz		
18b	000006246	Valve Coil - 50 Hz		
19		Expansion Valve		
19a	000009249	Expansion Valve - 60 Hz		
19b	000009253	Expansion Valve - 50 Hz		
20	000005675	Drier		

RFS1200 EVAPORATOR COMPARTMENT

#	PART #	DESCRIPTION	QTY	Note
21	000008557	High Pressure Safety Switch		
22	000009039	Suction Line Assembly		
23		Condenser Fan Blade		
23a	000005689	Condenser Fan Blade - 208-230V/60 Hz/1 Ph		
23b	000005573	Condenser Fan Blade - Water-cooled		
24		Drain Manifold - See Note for Usage		
24a	000006161	Drain Manifold - 115-230V/60 Hz/1 Ph		[1]
24b	000008300	Drain Manifold - 208-230V/60 Hz/1 Ph		[9]
24c	000005673	Drain Manifold - 230V/50 Hz/1 Ph		[1]
24d	000008630	Drain Manifold - 230-415V/50 Hz/1 Ph		[9]
25		Access Valve		
25a	000006408	Fitting - Access Valve		
25b	000006409	Core - Access Valve		
25c	000006410	Cap - Access Valve		
26	000005754	Reservoir Bracket		
27		Screws		
27a	000009040	Screw - M5 x 10TC		
27b	000009041	Screw - 3.9 x 13TC		
28		Backflow Preventer		
28a	000009971	Backflow Preventer 60 Hz - 3/8"		
28b	000009972	Backflow Preventer 50 Hz - 3/4"		
29		Compressor Overload		
29a	000008406	Overload - 208-230V/60 Hz/1 Ph		
29b	000008405	Overload - 230V/50 Hz/1 Ph		
30		Compressor Relay		
30a	000008388	Compressor Relay - 208-230V/60 Hz/1 Ph		
30b	000008387	Compressor Relay - 230V/50 Hz/1 Ph		
31		Run Capacitor		
31a	000008415	Run Capacitor - 208-230V/60 Hz/1 Ph		
31b	000008414	Run Capacitor - 230V/50 Hz/1 Ph		
32		Start Capacitor		
32a	000008432	Start Capacitor - 208-230V/60 Hz/1 Ph		
32b	000008431	Start Capacitor - 230V/50 Hz/1 Ph		

PART NOTES:

[1] - Air-cooled
[2] - Water-cooled - 60 Hz
[3] - Water-cooled - 50 Hz
[4] - Includes Hoses, Float & Two Microswitches
[5] - Discontinued
[6] - Radio Interference Filter
[7] - 230V/60 Hz
[8] - 230V/50 Hz
[9] - Water-cooled

RFS1200 PANELS

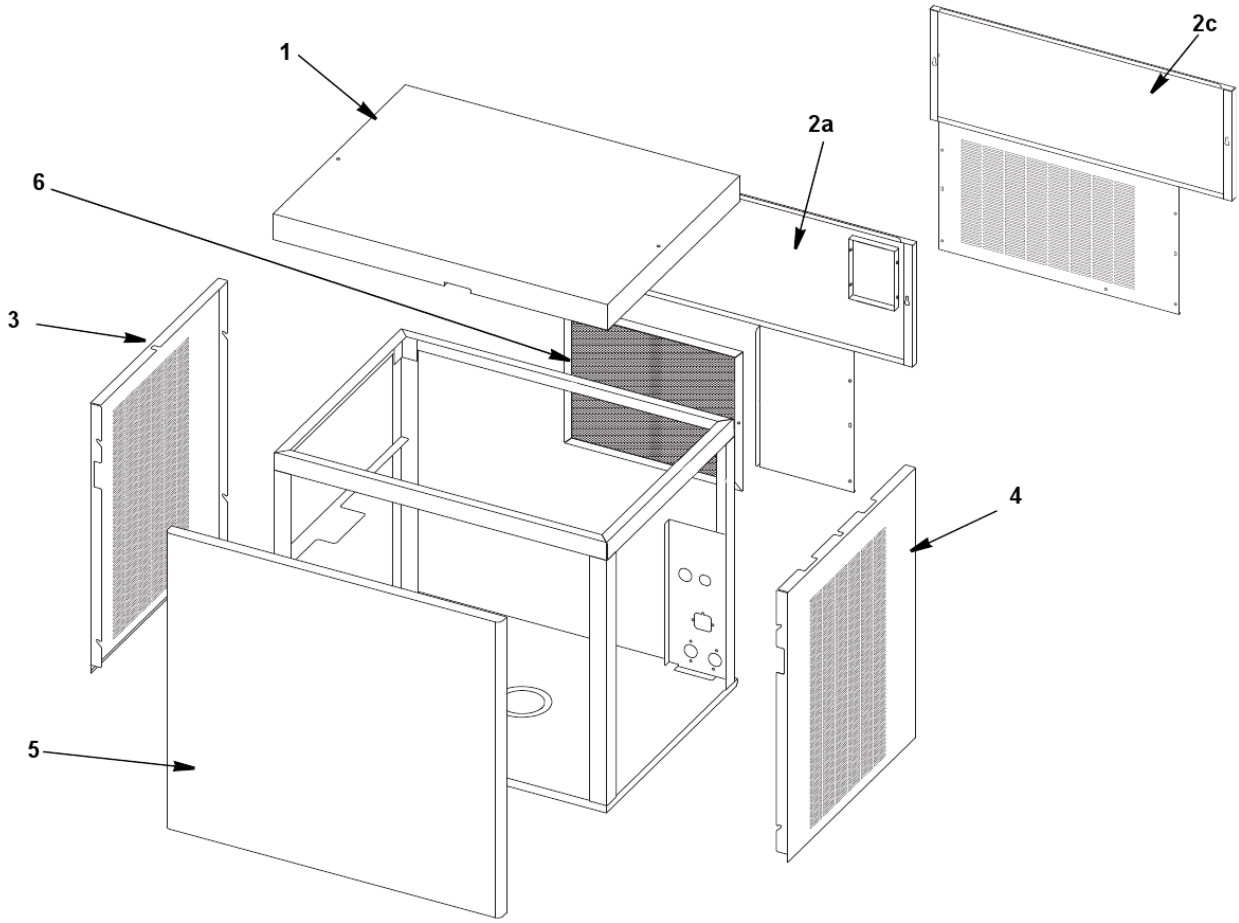

RFS1200 PANELS

#	PART #	DESCRIPTION	QTY	Note
1	000009245	Top Panel		
2		Back Panel		
2a	000009246	Back Panel - 208-230V/60 Hz/1 Ph		
2b	000009252	Back Panel Air-cooled - 230V/50 Hz/1 Ph		
2c	000010019	Back Panel Water-cooled - 230V/50 Hz/1 Ph		
3	000008768	Left Side Panel		
4	000008757	Right Side Panel		
5	000009248	Front Panel Assembly		
6	000009247	Air Filter		
7	000010433	Cartoning		