Manitowoc

Foodservice

Parts Manual

For more Parts Information:
https://manitowocfsg.sysonline.com/Default.aspx

TABLE OF CONTENTS

Manitowoc Foodservice [Updated: Sep. 30, 2013]
Manitowoc - Ice & Related
Parts Catalog
Ice Machine
RF Series
RF Model - Air & Water
RF2300
RF2300 Evaporator Assembly 1
RF2300 Evaporator Compartment 3
RF2300 Panels 6

RF2300 EVAPORATOR ASSEMBLY

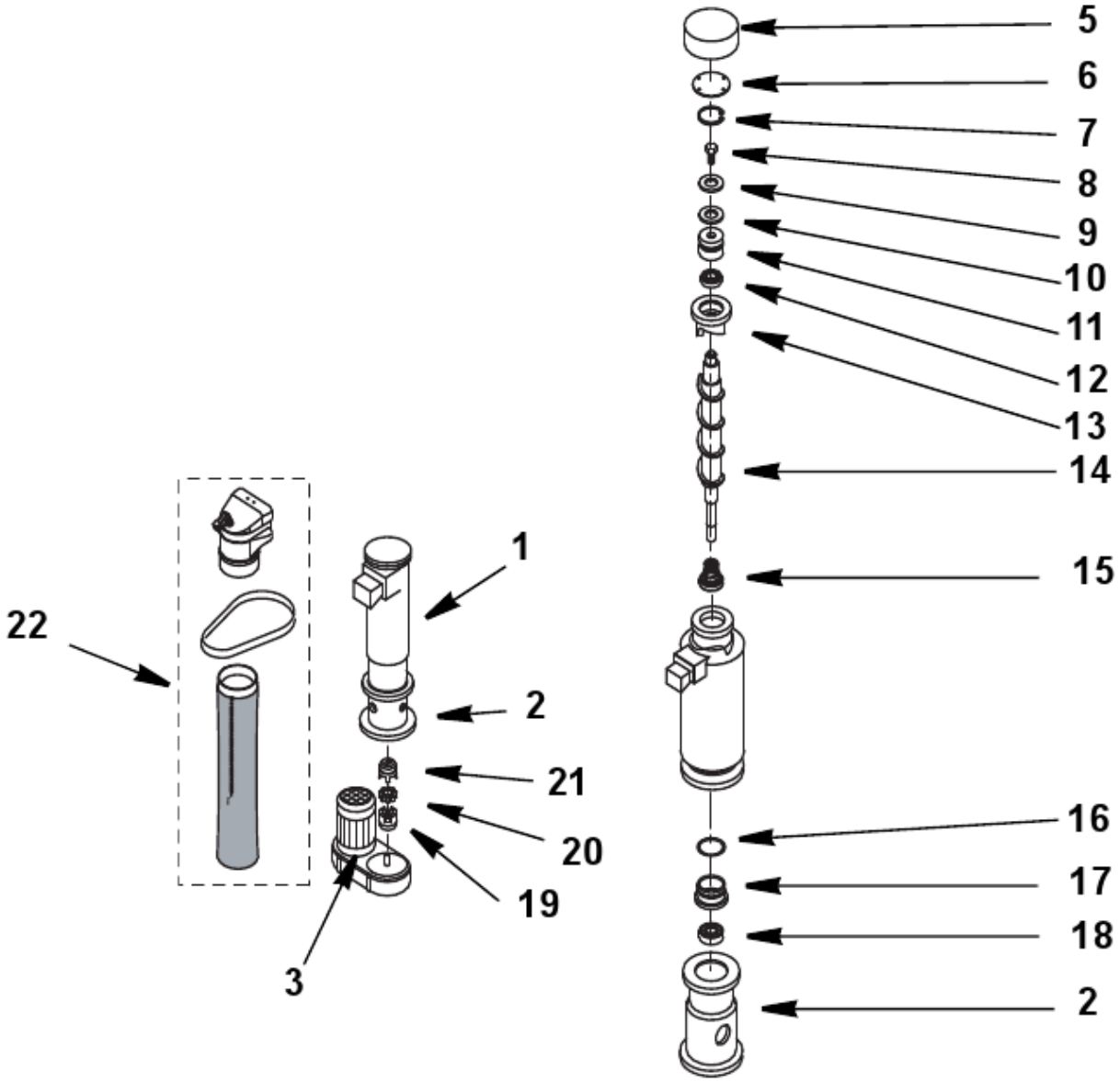

RF2300 EVAPORATOR ASSEMBLY

#	PART #	DESCRIPTION	QTY	Note
1	000005682	Evaporator Assembly		
2	000005694	Foundation		
3		Gearmotor Assembly		
3a	000006064	Gearmotor Assembly - 220V/60 Hz/1 Ph		
3b	000005699	Gearmotor Assembly - 230V/50 Hz/1 Ph		
4		Gearmotor Capacitor		
4a	000007822	Gearmotor Capacitor - 230V/50 Hz/1 Ph		
4b	000007823	Gearmotor Capacitor - 220V/60 Hz/1 Ph		
5	000005732	Insulating Cap		
6	000005646	Bearing Cap		
7	000005758	Snap Ring		
8	000005600	Auger Bolt		
9	000005610	Bearing Shim		
10	000005651	Self Lubricating Disc		
11	000005606	Upper Bearing		
12	000005736	Upper O-ring		
13	000005649	Cutter Head		
14	000005597	Auger		
15	000005779	Water Seal		
16	000005582	Lower O-Ring		
17	000005780	Water Seal Retainer		
18	000005604	Lower Bearing		
19	000005643	Flex Jaw Coupling Lower		
20	000005644	Flex Jaw Coupling Spider		
21	000005571	Flex Jaw Coupling Upper		
22	000011629	Ice Chute Assembly		
22	000011624	Ice Chute with Bulb Holder and Bin Thermostat		
22	000011620	Ice Chute with Bulb Holder		
22	000011623	Bin Thermostat		[1]
22	000007906	Ice Exhaust with Microswitch		
22	000007907	Locking Strip		
22	000007920	Cross Bar		
22	000007921	Ice Chute Assembly		[2]
22	000007916	Bulb Holder		[2]
22	000007917	Ice Outlet Pipe Assembly		[2]
23	000008643	Ice Chute Extension		

PART NOTES:

[1] - Before Serial Number M05108252010 must order 000011624 (bin thermostat AND ice chute with bulb holder).

[2] - Discontinued

RF2300 EVAPORATOR COMPARTMENT

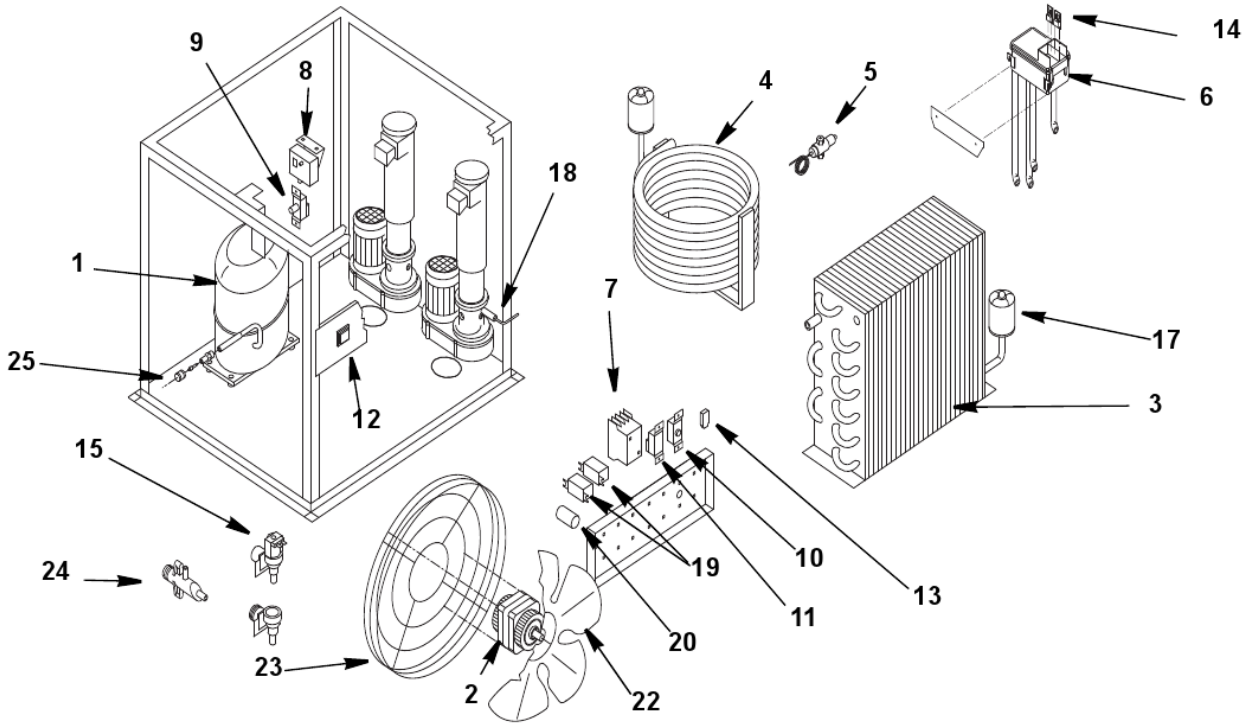

RF2300 EVAPORATOR COMPARTMENT

#	PART #	DESCRIPTION	QTY	Note
1		Compressor		
1a	000005620	Compressor - 220V/60 Hz/3 Ph		
1b	000005618	Compressor - 415V/50 Hz/3 Ph		
2		Condenser Fan Motor		
2a	000006065	Fan Motor - 220V/60 Hz/3 Ph		
2b	000005580	Fan Motor - 415V/50 Hz/3 Ph		
3	000005630	Air Condenser		
4		Water Cooled Condenser		
4a	000005637	Water Cooled Condenser Before Serial Number M04885572010		
4b	000008628	Water Cooled Condenser After Serial Number M04885572010		
5		Water Regulating Valve		
5a	000005776	Water Regulating Valve Before Serial Number M04885572010		
5b	000008629	Water Regulating Valve After Serial Number M04885572010		
6	000005752	Water Reservoir Assembly		[1]
6a	000005747	Water Reservoir Only		
7		Compressor Contactor		
7a	000008462	Compressor Contactor - 208-230V/60 Hz/1 Ph		
7b	000008462	Compressor Contactor - 208-230V/60 Hz/1 Ph		
8	000005764	Safety Pressure Switch		[2]
9	000005761	High Pressure Switch		
10	000005765	Bin Thermostat		[3]
11		Fan Cycle Control		
11a	000006060	Fan Cycle Control - 115-230V/50-60 Hz/1 Ph		[4]
11b	000006191	Fan Cycle Control - 208-230V/50-60 Hz/1 Ph		[5]
12	000005763	ON/OFF Rocker Switch		
13		Electronic Noise Reducer		[6]
13a	000005678	Electronic Noise Reducer		[4]
13b	000005680	Electronic Noise Reducer		[5]
14	000005760	Float Microswitch (each)		
15		Water Inlet Valve - Ice Making		
15a	000006058	Water Inlet Valve - 220V/60 Hz/1 Ph		
15b	000005772	Water Inlet Valve - 415V/50 Hz/3 Ph		
16		Water Inlet Valve - additional for Water-cooled Condenser		
16a	000006050	Water Inlet Valve Water-cooled Condenser - 208-230V/60 Hz/1 Ph		
16b	000005773	Water Inlet Valve - Water-cooled Condenser - 415V/50 Hz/3 Ph		
17	000005677	Drier		
18	000011883	Rotation Sensor		
19	000005745	Compressor Delay Relay - 230V/50-60 Hz/1 Ph		
20	000005613	Capacitor Condenser Fan Motor - 230V/60 Hz/3 Ph or 415V/50 Hz/3 Ph		
21	000008689	Expansion Valve		
22		Condenser Fan Blade		
22a	000005689	Condenser Fan Blade - 208-230V/60 Hz/1 Ph		[7]

RF2300 EVAPORATOR COMPARTMENT

#	PART #	DESCRIPTION	QTY	Note
22b	000005573	Condenser Fan Blade - Water-cooled		
23	000005690	Condenser Fan Guard		
24		Drain Manifold		
		Before Serial Number M04885572010		
24a	000006161	Drain Manifold - 115-230V/60 Hz/1 Ph		[8]
24b	000005640	Drain Manifold - 415V/50 Hz/3 Ph		[9]
		After Serial Number M04885572010		
24c	000008300	Drain Manifold - 208-230V/60 Hz/1 Ph		[10]
24d	000008630	Drain Manifold - 230-415V/50 Hz/1 Ph		[10]
25		Access Valve		
25a	000006408	Fitting - Access Valve		
25b	000006409	Core - Access Valve		
25c	000006410	Cap - Access Valve		
26	000005754	Reservoir Bracket		
27		Screws		
27a	000009040	Screw - M5 x 10TC		
27b	000009041	Screw - 3.9 x 13TC		
28		Backflow Preventer		
28a	000009971	Backflow Preventer 60 Hz - 3/8"		
28b	000009972	Backflow Preventer 50 Hz - 3/4"		

PART NOTES:

[1] - Includes Hoses
Includes Hoses, Float & Two Microswitches
[2] - LPCO
[3] - Discontinued
[4] - 60 Hz
[5] - 50 Hz
[6] - Radio Interference Filter
[7] - Air-cooled
[8] - Before Serial Number M0488557201060 Hz
[9] - Before Serial Number M0488557201050 Hz
[10] - After Serial Number M0488557201050 Hz

RF2300 PANELS

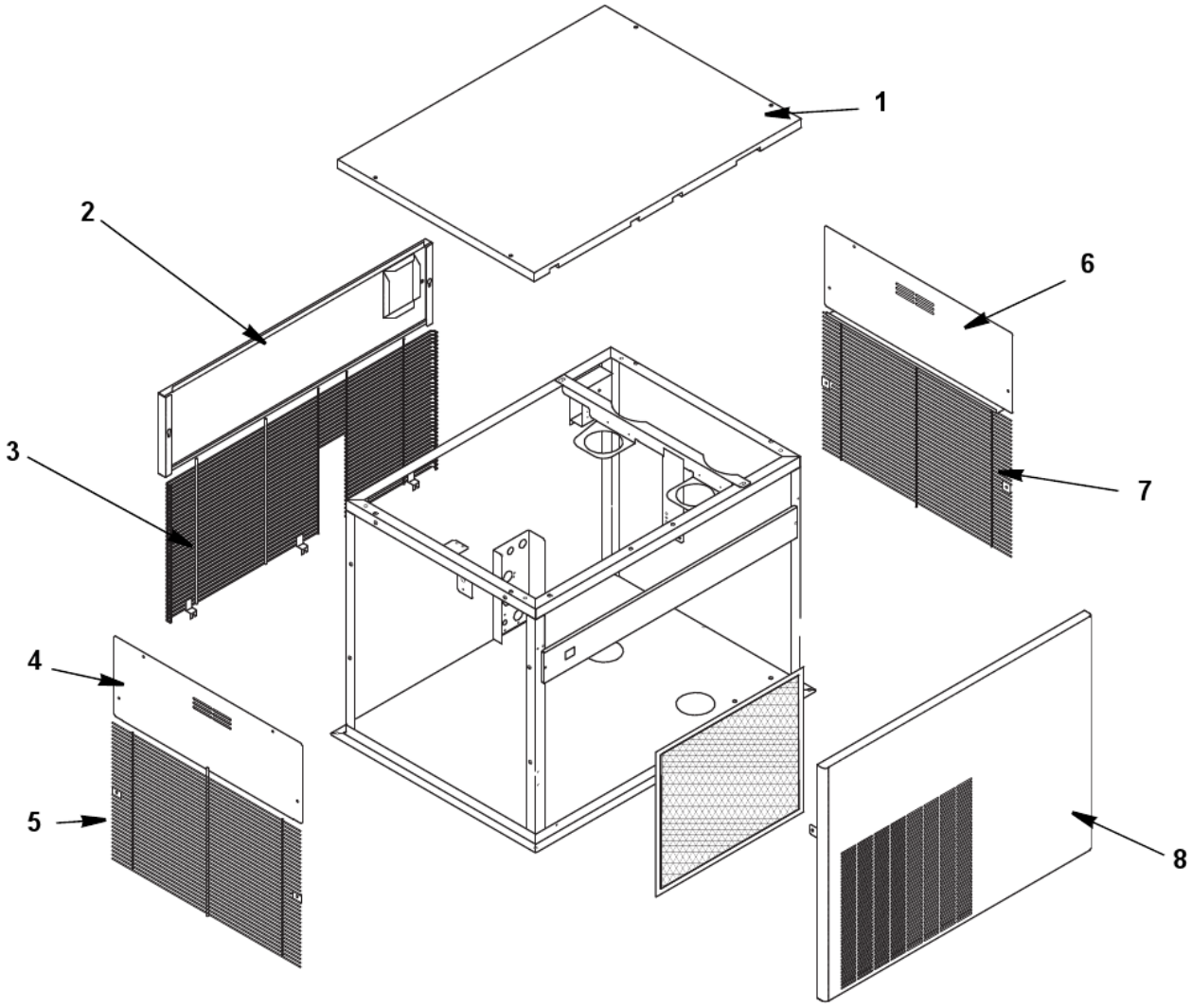

RF2300 PANELS

#	PART #	DESCRIPTION	QTY	Note
1	000006055	Top Panel		
2		Back Panel		
2a	000006057	Back Panel - 220V/60 Hz/3 Ph		
2b	000006103	Back Panel - 415V/50 Hz/3 Ph		
3	000005713	Back Grill		
4	000006056	Right Side Panel		
5	000005715	Right Side Grill		
6	000006056	Right Side Panel		
7	000005715	Right Side Grill		
8	000005788	Front Panel Assembly		
9	000005784	Air Filter		
10	000008683	Cartoning		