Manitowoc

Foodservice

Parts Manual

For more Parts Information:
https://manitowocfsg.sysonline.com/Default.aspx

Table of Contents

Manitowoc Foodservice [Updated: Sep. 30, 2013]
Manitowoc - Ice & Related
Parts Catalog
Ice Machine
Q Series
QM Model - UnderCounter
QM030
QM30 - Control Box Components 1
QM30 - Evaporator Compartment - Common Components 3
QM30 - Refrigeration Compartment - Common Components 5
QM30 - Refrigeration Compartment - Air-cooled Components 7
QM30 - Panels 9

QM30 - CONTROL BOX COMPONENTS

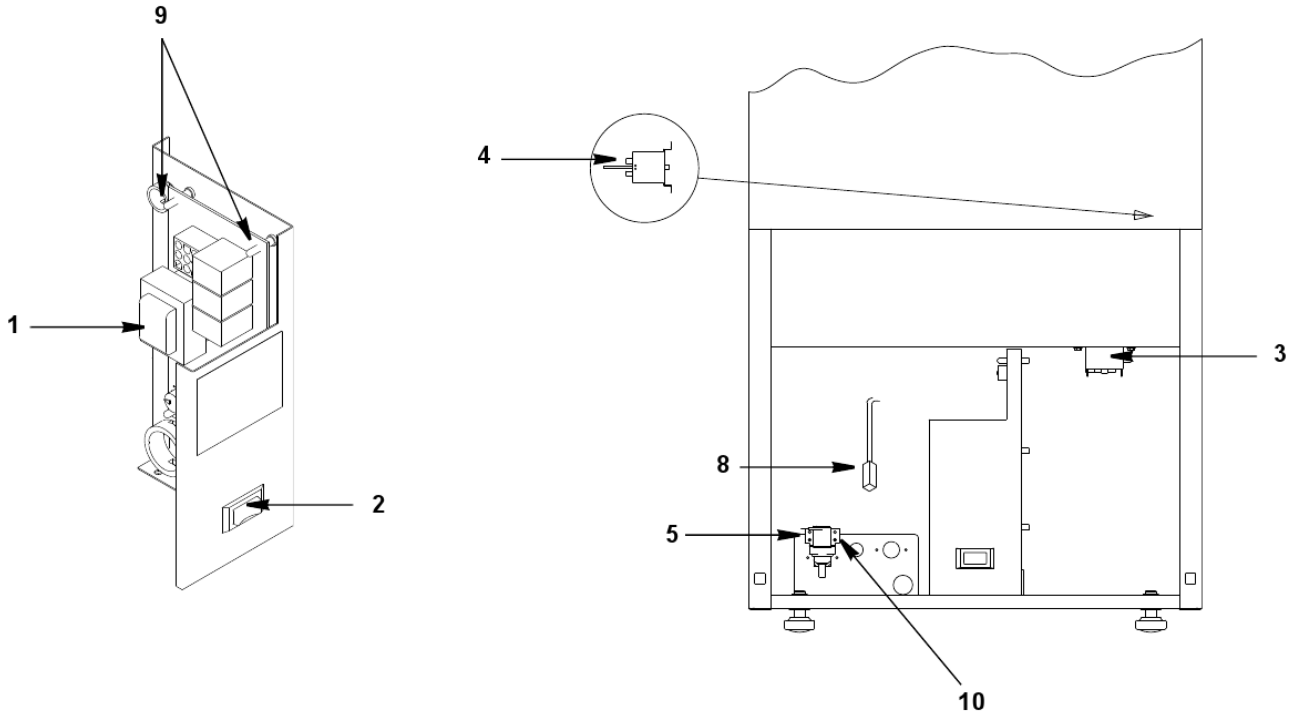

QM30 - CONTROL BOX COMPONENTS

#	PART #	DESCRIPTION	QTY	Note
1	7629243	Control Board		
1a	2511373	Fuse - Mounted on Control Board		
2	2301513	Toggle Switch		
3	8505533	Relay - 115V/60 Hz/1 Ph		[1]
4	7629661	Bin Thermostat Control		
5		Water Inlet Valve		
5a	040001814	Water Inlet Valve - 115V/60 Hz		
5b	2405143	Water Inlet Valve - 230V/50 Hz		
5c	040001675	Water Inlet Valve Bracket		
6		Wire Harness		
6a	2008323	Wiring Harness - 115V/60 Hz		
6b	2008313	Wiring Harness - 230V/50 Hz		
6c	2032403	Wire Harness Jumper		
7		Power Cord		
7a	040001218	Power Cord - 115V/60 Hz		
7b	2006749	Power Cord - 230V/50-60 Hz		
8	2351313	Thermistor		[2]
9	4302253	Control Board Mounting Supports		
10	5202069	Screw - #10-24 x 0.50" HEX		[3]

PART NOTES:

[1] - Used on 115V Only
[2] - Mounted to Refrigeration Line
[3] - Used to Mount Water Inlet Valve

QM30 - EVAPORATOR COMPARTMENT - COMMON COMPONENTS

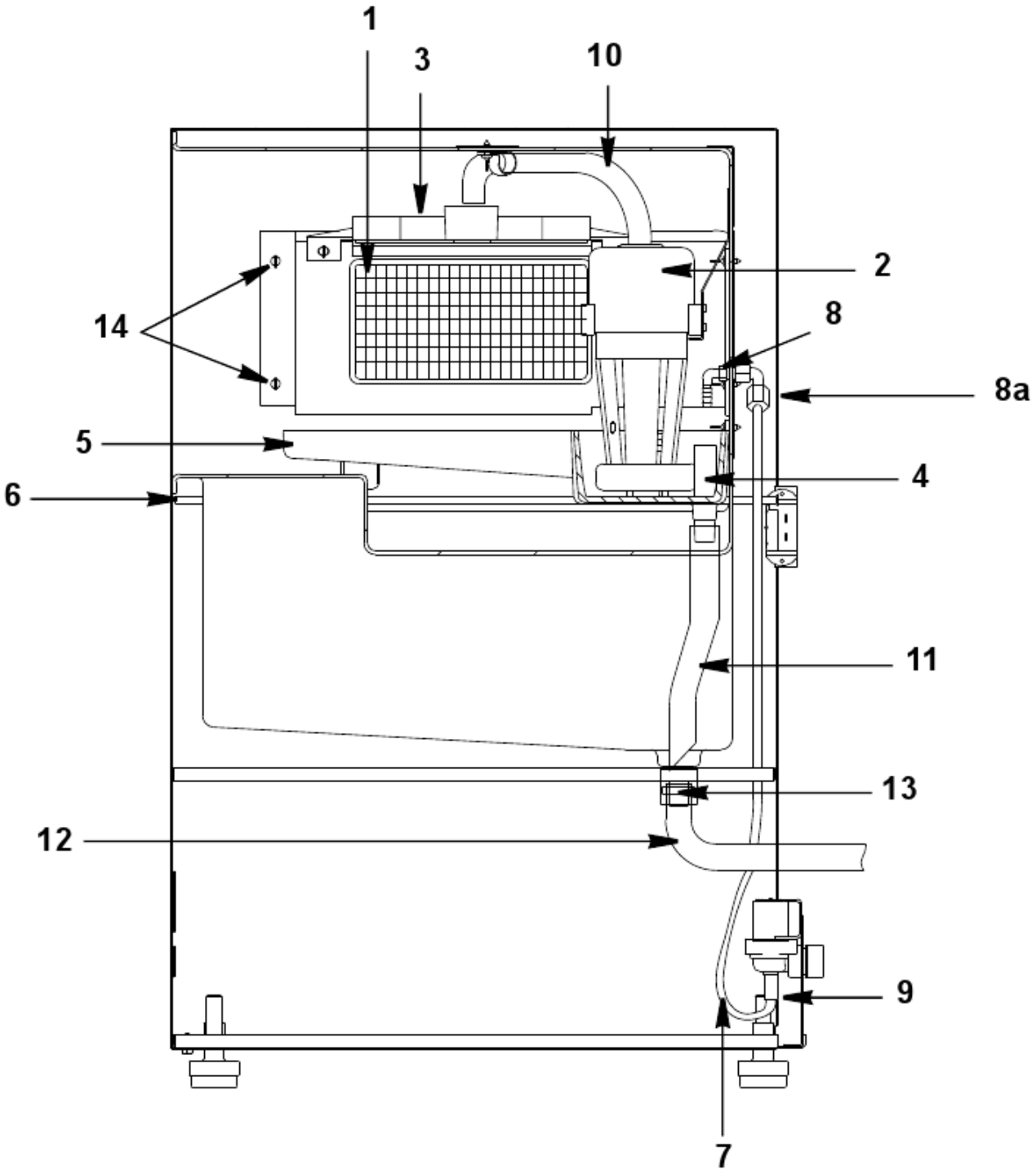

QM30 - EVAPORATOR COMPARTMENT - COMMON COMPONENTS

#	PART #	DESCRIPTION	QTY	Note
1		Evaporator Assembly		
1a	7627923	Evaporator Assembly - Dice Cube		
2		Water Pump		
2a	2001423	Water Pump - 115V/60 Hz		
2b	2001413	Water Pump - 230V/50 Hz - Before Serial Number 310145529		
2c	040000944	Water Pump - 230V/50 Hz - After Serial Number 310145529		
3	7629403	Water Distribution Tube - QM20/QM30		
4	040001210	Water Drain Stand Pipe		
5	040001227	Water Trough		
6	000000112	Bin Thermostat Control Tube		
7	4420291	Vinyl Tube - 0.25" OD		
8	8390133	Water Inlet Elbow - Male		
8a	8390143	Water Inlet Elbow - Female		
9	5650729	Compression Nut		
10	040001212	Water Pump Out Tubing - 0.5" OD		
11	4420383	Clear Tubing - 0.625" ID		
12	4421443	Bin Drain Tubing - 0.625 ID		
13	5650649	Hose Clamp - 0.759"/0.848" ID		
14	5305123	Thumbscrew SS - #8-32 x 0.44"		
15	5012169	Thumbscrew - #8-32 x 0.625		[1]
16	040001217	Thumbscrew - #8-32 x 0.625"		[2]

PART NOTES:

[1] - Stainless Steel Head Thumbscrew for Water Trough and Water Distributor

[2] - Plastic Head Thumbscrew for Water Trough and Water Distributor

QM30 - REFRIGERATION COMPARTMENT - COMMON COMPONENTS

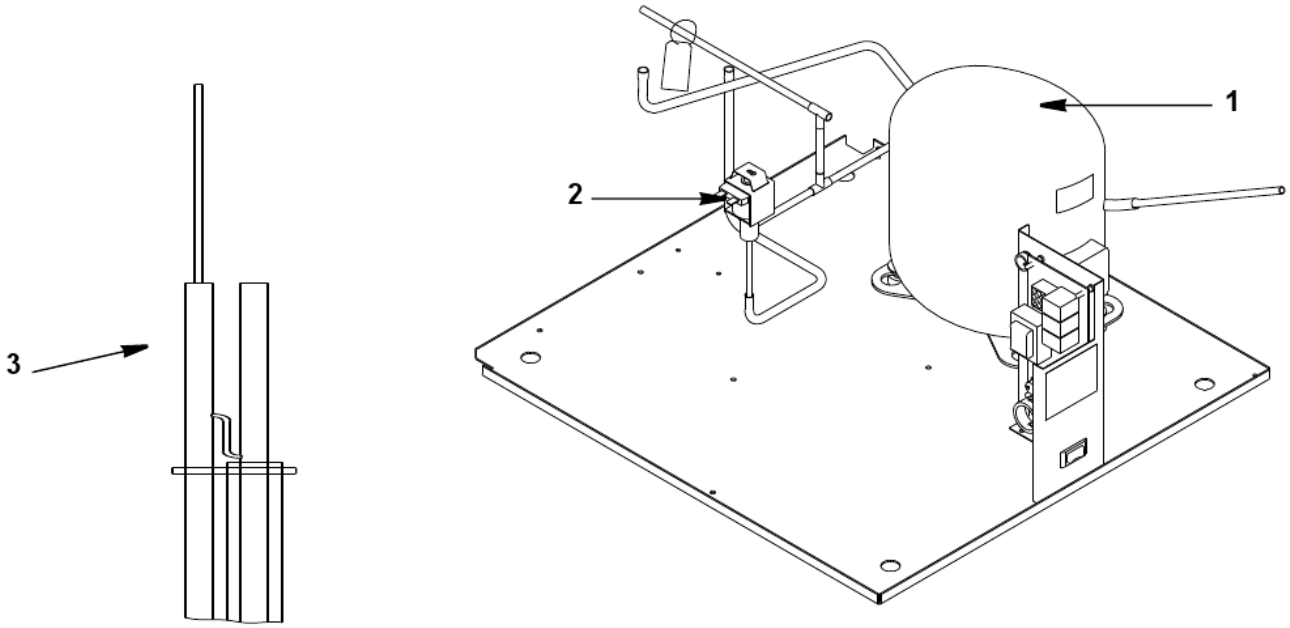

QM30 - REFRIGERATION COMPARTMENT - COMMON COMPONENTS

#	PART #	DESCRIPTION	QTY	Note
1		Compressor		
1a	7629183	Compressor - 115V/60 Hz/1 Ph		
1b	8505683	Overload / Relay Assembly		
1c	8505703	Starting Device		
1d	7629193	Compressor - 230V/50 Hz/1 Ph		
1e	8505503	Overload / Relay Assembly		
1f	8505693	Starting Device		
2		Harvest Valve		
2a	7629633	Harvest Valve Assembly - 115V/60 Hz		
2b	2405233	Harvest Valve 115V Coil Only		
2d	7629643	Harvest Valve Assembly - 230V/50-60 Hz		
2e	2405183	Harvest Valve 230V/50 Hz Coil Only		
3	7629203	Suction Line/Cap Tube Assembly		

QM30 - REFRIGERATION COMPARTMENT - AIR-COOLED COMPONENTS

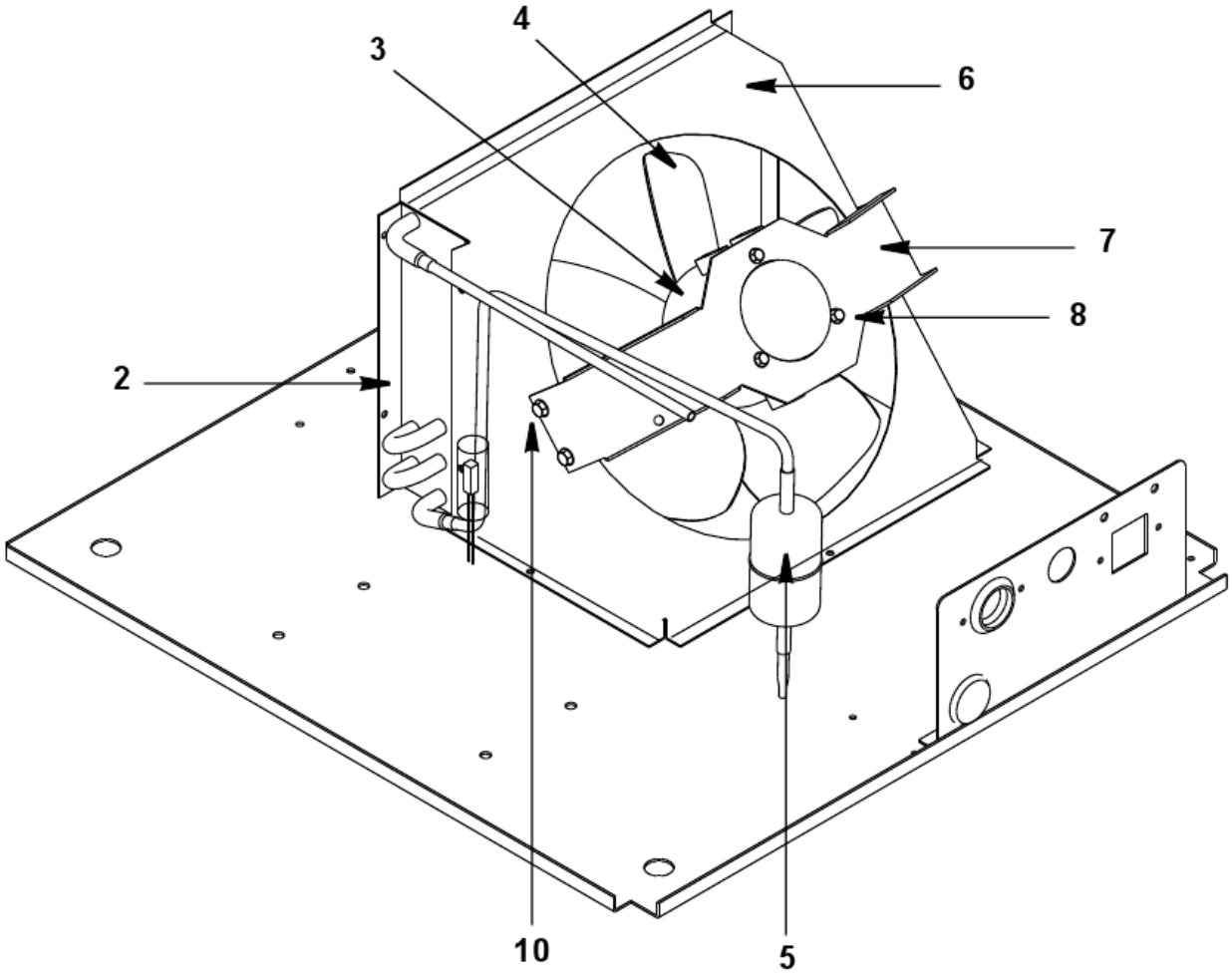

QM30 - REFRIGERATION COMPARTMENT - AIR-COOLED COMPONENTS

#	PART #	DESCRIPTION	QTY	Note
1		Compressor		[1]
2	8851353	Air Condenser		
3		Fan Motor		
3a	2000223	Fan Motor - 115V/60 Hz/1 Ph		
3b	2000219	Fan Motor - 208-230V/50-60 Hz		
4	2416243	Fan Blade		
5	8253433	Drier		
6	6029381	Fan Shroud		
7	6061741	Fan Motor Mounting Bracket		
8	5005513	Screw 0.7 x 8 mm		
9	5475079	Speed Nut - 0.25" x 20		
10	5202069	Screw - #10-24 x 0.50" HEX		

PART NOTES:

[1] - Refer to COMMON PARTS Page

QM30 - PANELS

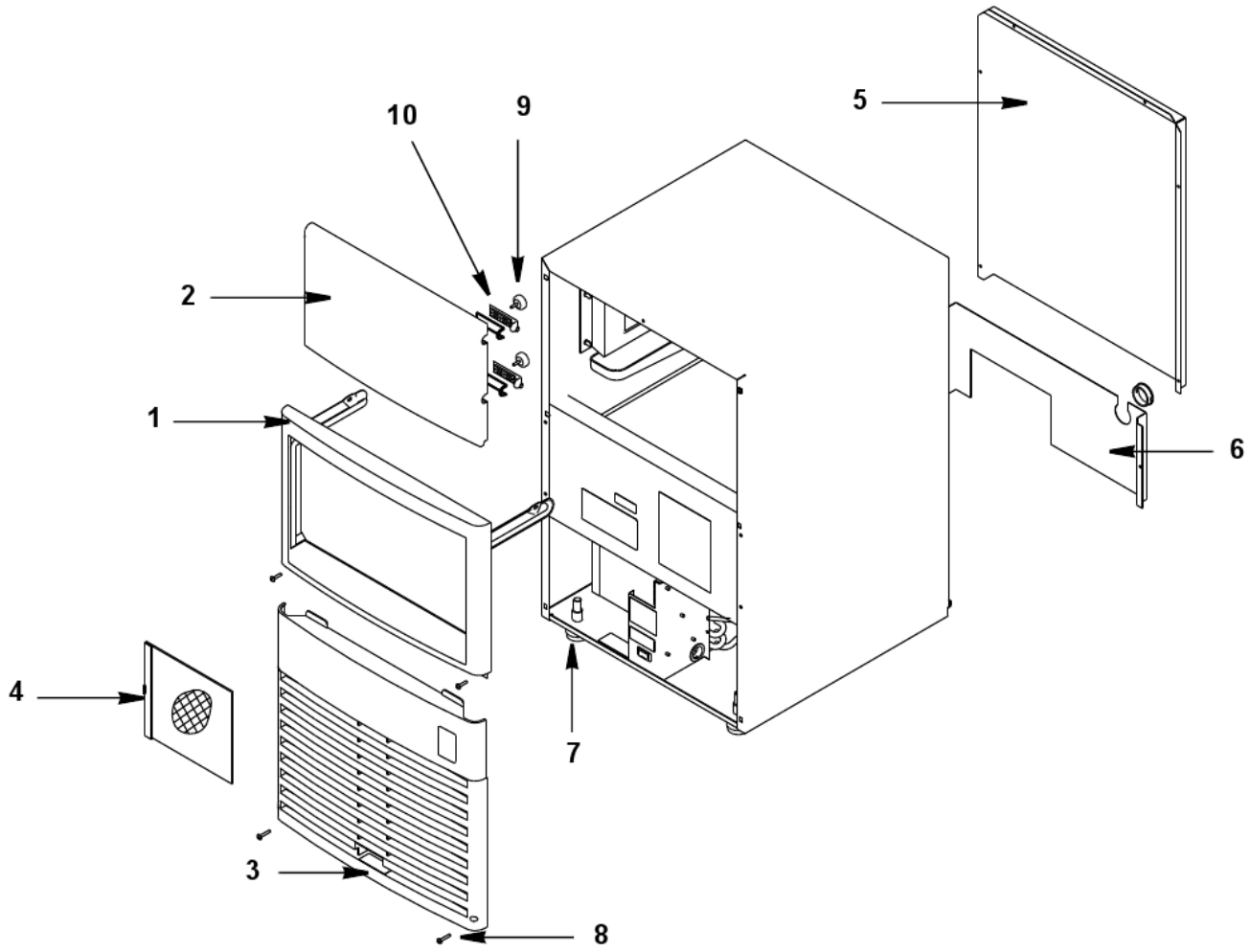

QM30 - PANELS

#	PART #	DESCRIPTION	QTY	Note
1	040000627	Door Frame Assembly		
2	040002220	Bin Door		
3	7629213	Front Panel Assembly		
4	7629223	Air Filter		
5	6047101	Back Panel, Upper		
6	6029461	Back Panel, Lower		
7	3302613	Leg Leveler		
8	5202239	Front Cover Screw		
9	5012353	Door Pin Thumbscrews		
10	7629233	Door Pin Gasket and Door Pin Assembly		
11	3302583	Ice Scoop		