Manitowoc

Foodservice

Parts Manual

For more Parts Information:
https://manitowocfsg.sysonline.com/Default.aspx

TABLE OF CONTENTS

Manitowoc Foodservice [Updated: Sep. 30, 2013]
Manitowoc - Ice & Related
Parts Catalog
Ice Machine
Ice/Bev Series
Ice/Bev Model - QuietQube
iB0696C, iCVD0696
IB0696C Control Box 1
IB0696C Evaporator Compartment 3
IB0696C Refrigeration Compartment 5
IB0696C Head Section - Panels 8
iCVD0696 Condensing Unit 10
iCVD0696 Condensing Unit - Panels 13

IB0696C CONTROL BOX

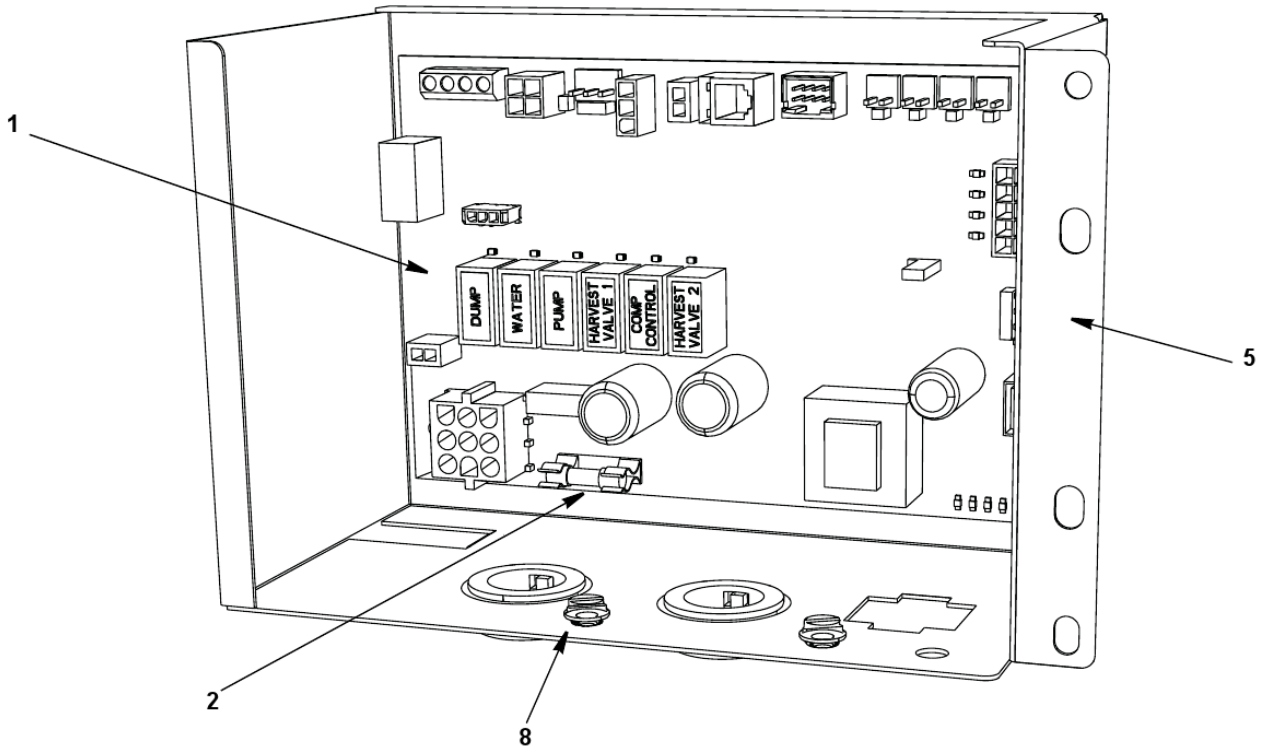

IB0696C CONTROL BOX

#	PART #	DESCRIPTION	QTY	Note
1	000008309	Control Board		
2	000009181	8 amp Ceramic Fuse - Mounted on Control Board		
3	000007469	Wiring Harness - Control Box		
4	2000773	Wiring Harness - Control Box		
5	000007537	Control Box		
6	000010456	Control Box Cover		
7	4302253	Control Board Mounting Supports		
8	5202169	Screw - #10-24 x 0.50" Ground		
9	2500021	Bushings		
10		Power Cord		
10a	2033013	Power Cord - 115V		

IB0696C EVAPORATOR COMPARTMENT

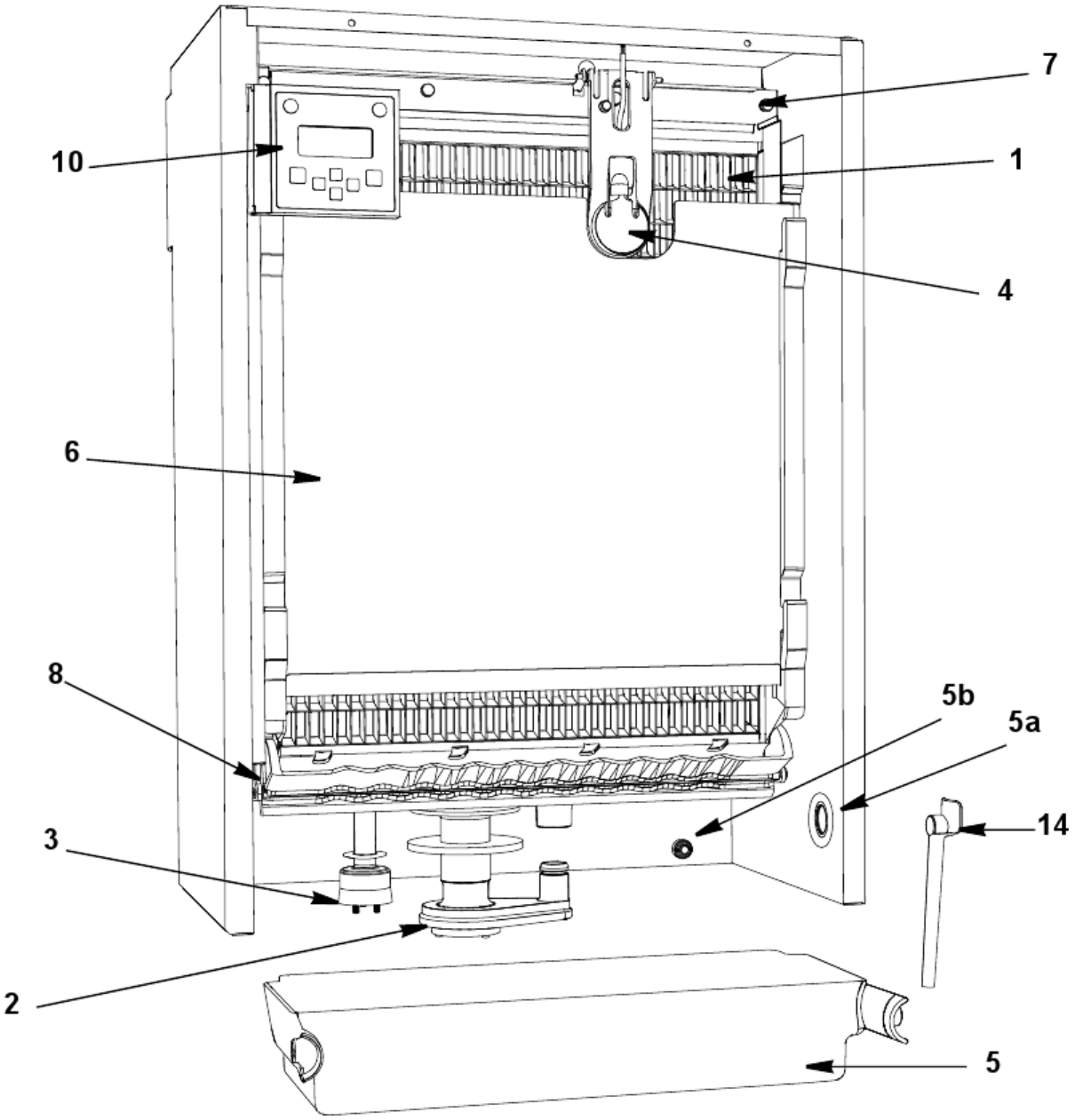

IB0696C EVAPORATOR COMPARTMENT

#	PART #	DESCRIPTION	QTY	Note
1		Evaporator Assembly		
1a	000009313	Evaporator - Half Dice Cube		
2		Water Pump		
2a	8251129	Water Pump - 115V/60 Hz		
2b	000001202	Water Pump Mount		
3	000007052	Water Level Probe		
3a	000007099	Wire - Control Box to Probe		
3b	000007053	Water Level Probe - Holder		
3c	5202099	Screw - #10-24 x 0.50" PHIL		[1]
3d	000007847	Mounting Bracket		
4	000009184	Ice Thickness Control Probe		
5	000007482	Water Trough		
5a	000007619	Trough Mount		
5b	000007897	Trough Support		
6	000009174	Splash Shield		
7	7602193	Water Distribution Tube - 30" Models		
7a	5004649	O-Rings		
8	000002056	Ice Damper Assembly		
9	000001756	Magnetic Bin Switch		
9a	000007410	Bin Switch Wiring Harness		
9b	000001421	Bin Switch Covers		
10		LCD Display with Housing		
10a	000007738	Use with Green Control Board		
10b	000007739	Use with Blue or Red Control Board		
11	000007828	LCD Wiring Harness - 20" Long		
12		Front Panel LCD Frame		
12a	000007480	Front Panel LCD Frame With Key Guard		
12b	000007479	Front Panel LCD Frame Without Key Guard		
12c	K00433	Display Cover		[2]
13	5004799	Thumbscrew SS - #8-32 x 0.375"		
14	000008155	Thermostat Probe with Bracket		
14a	5000013	Thumbscrew - #8-32 x 0.375"		
15	4000603	Bottom Splash Shield		
15a	5000453	Wing-head Mounting Stud		
15b	5650853	Wing-head Receptacle		
16		Evaporator Frames		
16a	000002786	Evaporator Top Frame Assembly		
16b	000002787	Evaporator Bottom Frame Assembly		

PART NOTES:

[1] - Mount Water Level Probe Holder

[2] - hides the display completely

IB0696C REFRIGERATION COMPARTMENT

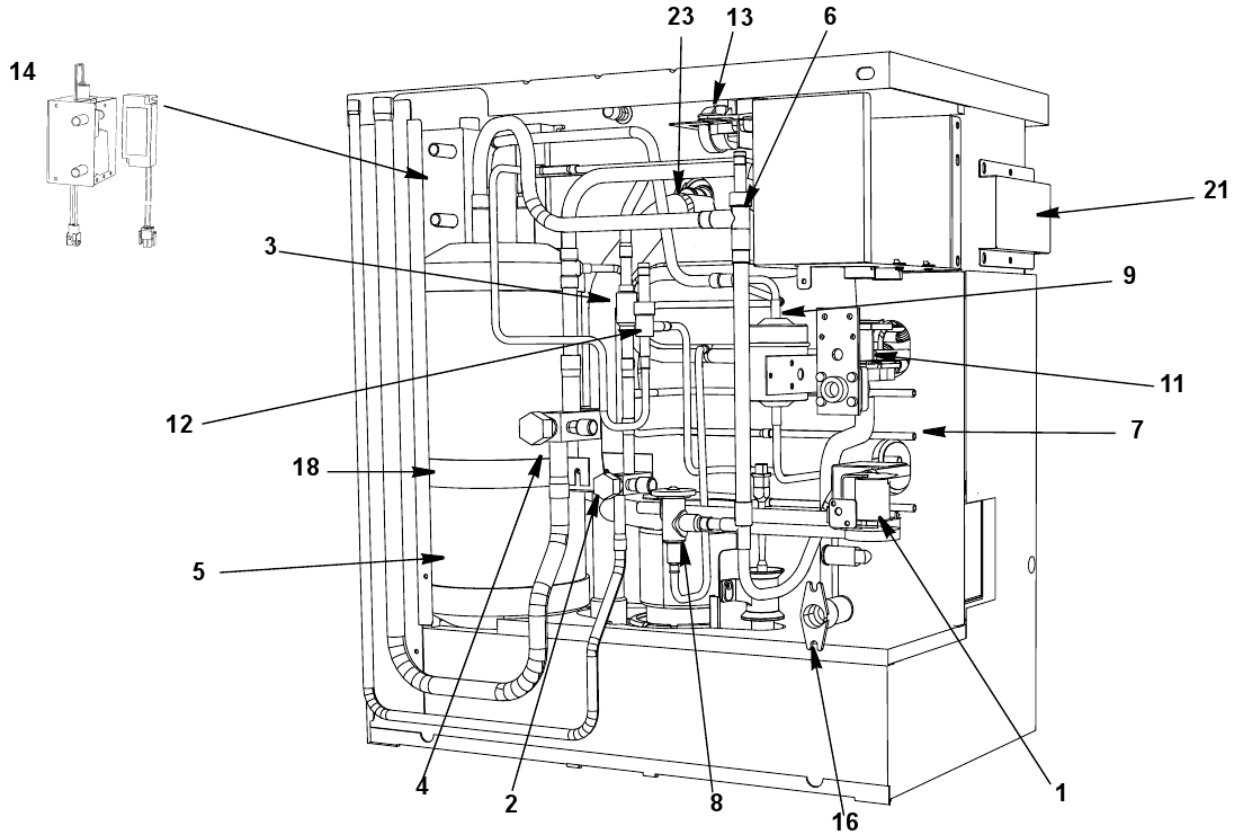

IB0696C REFRIGERATION COMPARTMENT

#	PART #	DESCRIPTION	QTY	Note
1		Water Dump Valve		
1a	000001767	Water Dump Valve - 115V/60 Hz		
2	8373293	Manual Shut-off Valve - Liquid Line		
3	8373149	Magni-Check Valve - 0.375"		
4	5373303	Manual Shut-off Valve Suction Line		
4a	7600643	Insulation Boot		
4b	8373023	Valve Cap		
5	000006777	Receiver		
6		Cool Vapor Valves		
6a	000007018	Danfoss Solenoid Valve Including 115V/60 Hz Electrical Coil		
6b	000005156	Danfoss Solenoid Valve Coil Only - 115V/60 Hz		[1]
7	8373253	Access Valve		
7a	5650753	Caps for Refrigeration Service Valve		
8	7600193	Expansion Valve		
8a	7600803	Expansion Valve Body Insulation Boot		
8b	4000923	Valve Insulation Boot - Bulb		
9	8930249	Drier		
10	000008310	Thermistor with Spring Clips		
11		Water Inlet Valve		
11a	000007965	Water Inlet Valve - 115V/60 Hz/1 Ph		
12		Liquid Line Solenoid Valve		
12a	000007035	Solenoid Valve Including 115V/60 Hz Coil		
12b	000005156	Danfoss Solenoid Valve Coil Only - 115V/60 Hz		[1]
13		Air Assist Pump		
13a	000007222	Air Assist - 115V/60 Hz		
13b	000007850	Mounting Bracket		
13c	4011739	Air Manifold		
14	K00424	LuminIce		
14a	K00425	LuminIce Bulb		
14b	000007409	LuminIce Wiring Harness		
14c	000007990	Bulkhead Fitting 2.25"		
14d	000008269	Bulkhead Fitting 2.75"		
15	000008024	Dump Valve Outlet Vinyl Tubing		
16	8706133	Female Wing Adapter - 0.50"		
17	5650529	Clamp - Expansion Valve Bulb		
17a	3000503	Strap - Expansion Valve Bulb - 0.5"		
18	000007466	Receiver Strap		
19	000007465	Receiver Mounting Bracket		[2]
20	000007464	Service Valve Bracket		[3]
21	000008496	Hinge Bracket		
22	000008635	Drip Bracket		
23	000007411	Molded Vinyl Tube		[4]

IB0696C REFRIGERATION COMPARTMENT

#	PART #	DESCRIPTION	QTY	Note

PART NOTES:

[1] - \pages from 000005156_02.jpg" width=280 height=256>
[2] - Mounts to Bulkhead & Strap
[3] - Mounts to Receiver Mounting Bracket
[4] - Water Inlet Valve to Water Pump and Water Distribution Tube

IB0696C HEAD SECTION - PANELS

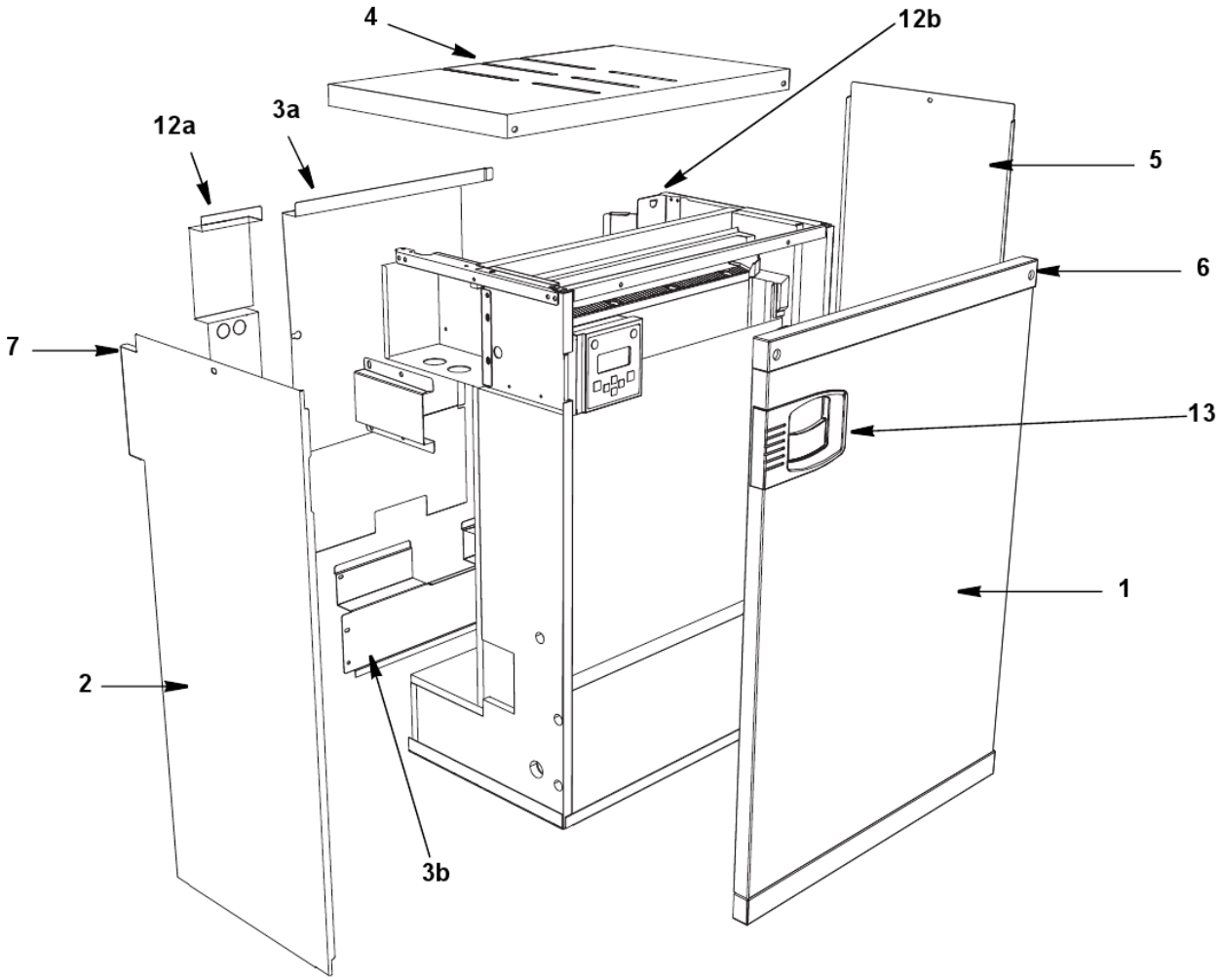

IB0696C HEAD SECTION - PANELS

#	PART #	DESCRIPTION	QTY	Note
1	000007700	Front Panel		
1a	000007657	Top Endcap		
1b	000007658	Bottom Endcap		
2	000007720	Left Side Panel		
3		Back Panel		
3a	000007535	Back Panel Upper		
3b	000007555	Back Panel Lower		
4	000007938	Cover Top		
5	000007723	Right Side Panel		
6	5000399	Front Panel Screw		
6a	3718199	O-ring		
6b	5474919	Speed Nut Assembly to Mount Front Cover		[1]
6c	5429109	Cage Nut to Mount Front Panel		[2]
7	5202099	Screw - #10-24 x 0.50" PHIL		[3]
8	5000373	Screw - #10-24 x 0.50" PHIL		[4]
9	000007621	Top Angles		[5]
10	6054901	Bottom Angles		[5]
11	000000138	Front Angles		[6]
12		Corner Posts		
12a	000007531	Corner Post - Right		[7]
12b	000007532	Corner Post - Left		[8]
13		Front Panel LCD Frame		
13a	000007480	Front Panel LCD Frame With Key Guard		
13b	000007479	Front Panel LCD Frame Without Key Guard		
13c	K00433	Display Cover		[9]
14	000000552	Cartoning		

PART NOTES:

[1] - Round Hole
[2] - Square Hole
[3] - Mounts Side Panels
[4] - Mounts Rear Panels
[5] - Right & Left
[6] - Top & Bottom
[7] - suction line/liquid line panel
[8] - connection panel
[9] - hides the display completely

ICVD0696 CONDENSING UNIT

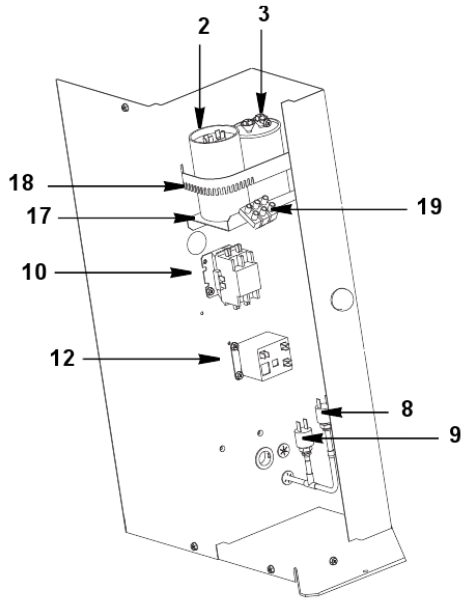

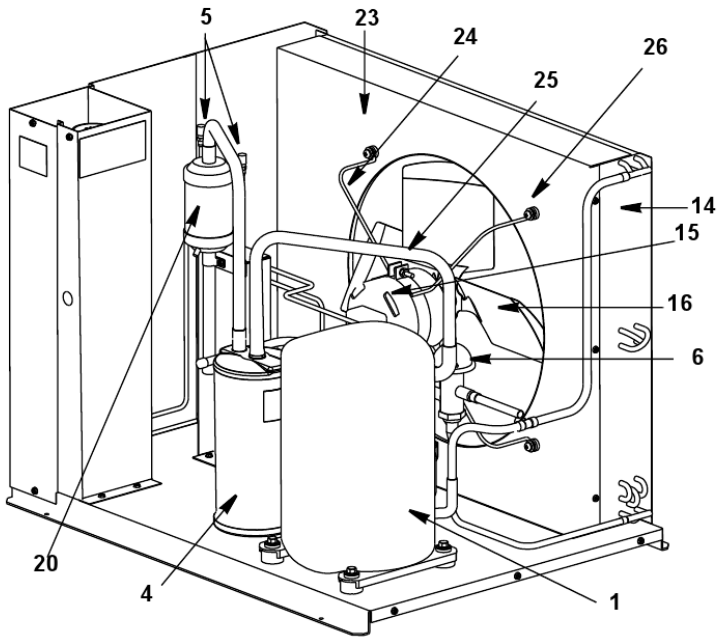

ICVD0696 CONDENSING UNIT

#	PART #	DESCRIPTION	QTY	Note
1		Compressor		
1a	000009307	Bristol Compressor - 208-230V/60 Hz/1 Ph		
1b	000009959	Bristol Compressor - 230V/50 Hz/1 Ph		
1c	000009957	Bristol Compressor - 230V/60 Hz/ 3 Ph		
1d	000003447	Molded Plug		
2		Start Capacitor		
2a	000006454	Start Capacitor - 50-60 Hz/1 Ph		
2b	8505513	Start Capacitor - 50-60 Hz/1 Ph		
3	2010133	Run Capacitor - 115-230V/50-60 Hz/1 Ph		
4	000007280	Suction Accumulator		
5	8373253	Access Valve		
6	000004070	Head Pressure Control Valve		
7	8373149	Magni-Check Valve - 0.375"		
8	2001263	Fan Cycling Control - 200-250 psig		[1]
9	2001243	High Pressure Cut-out Control		
10		Contactor		
10a	000007597	Contactor - 50-60 Hz/1 Ph - 24 Volt Coil		
10b	000007598	Contactor - 60 Hz/3 Ph - 24 Volt Coil		
11	2002229	Low Pressure Cut-out Control		
12		Start Potential Relay		
12a	2009513	Start Potential Relay - 60 Hz/1 Ph		
12b	000009183	Start Potential Relay - 50 Hz/1 Ph		
13	000007581	Transformer		
14	8851443	Air-cooled Condenser		
15		Fan Motor		
15a	000003031	Fan Motor - 208-230V/60 Hz/1-3 Ph		
15b	000003032	Fan Motor - 208-230V/50 Hz/1 Ph		
16	2416303	Fan Blade		
17	6034981	Capacitor Mounting Bracket		
18	6021601	Capacitor Mounting Strap		
19		Terminal Block		
19a	000009929	Terminal Block - 60 Hz with Wiring Harness		
19b	2006143	Terminal Block - 50 Hz - 3 Pole		
20	8250539	Suction Line Filter		
20a	000006484	Suction Line Filter Bracket		
21		Wiring Harness		
21a	000007741	Wiring Harness - 230V/60 Hz/1 Ph		
21b	000007740	Wiring Harness - 230V/50 Hz/1 Ph		
21c	000007747	Wiring Harness - 230V/60 Hz/3 Ph		
22		Compressor Mounting		
22a	8503069	Mounting - Rubber Grommet		
22b	8503949	Mounting - Sleeve		

ICVD0696 CONDENSING UNIT

#	PART #	DESCRIPTION	QTY	Note
22c	5004819	Compressor Mounting - Bolt		
22d	5004829	Compressor Mounting - Nut		
23	6037041	Fan Shroud		
24	3006823	Fan Motor Mounting Bracket		
25	5033589	Mounting - Screw		
25a	5545119	Mounting - Lockwasher		
25b	5429529	Mounting - Hexnut		
26	5033589	Mounting - Screw		
26a	5545119	Mounting - Lockwasher		
26b	5573059	Mounting - Flatwasher		
26c	5429559	Mounting - Rubber Wellnut		

PART NOTES:

[1] - \pages from 200126_09.jpg" width=150 height=306>

ICVD0696 CONDENSING UNIT - PANELS

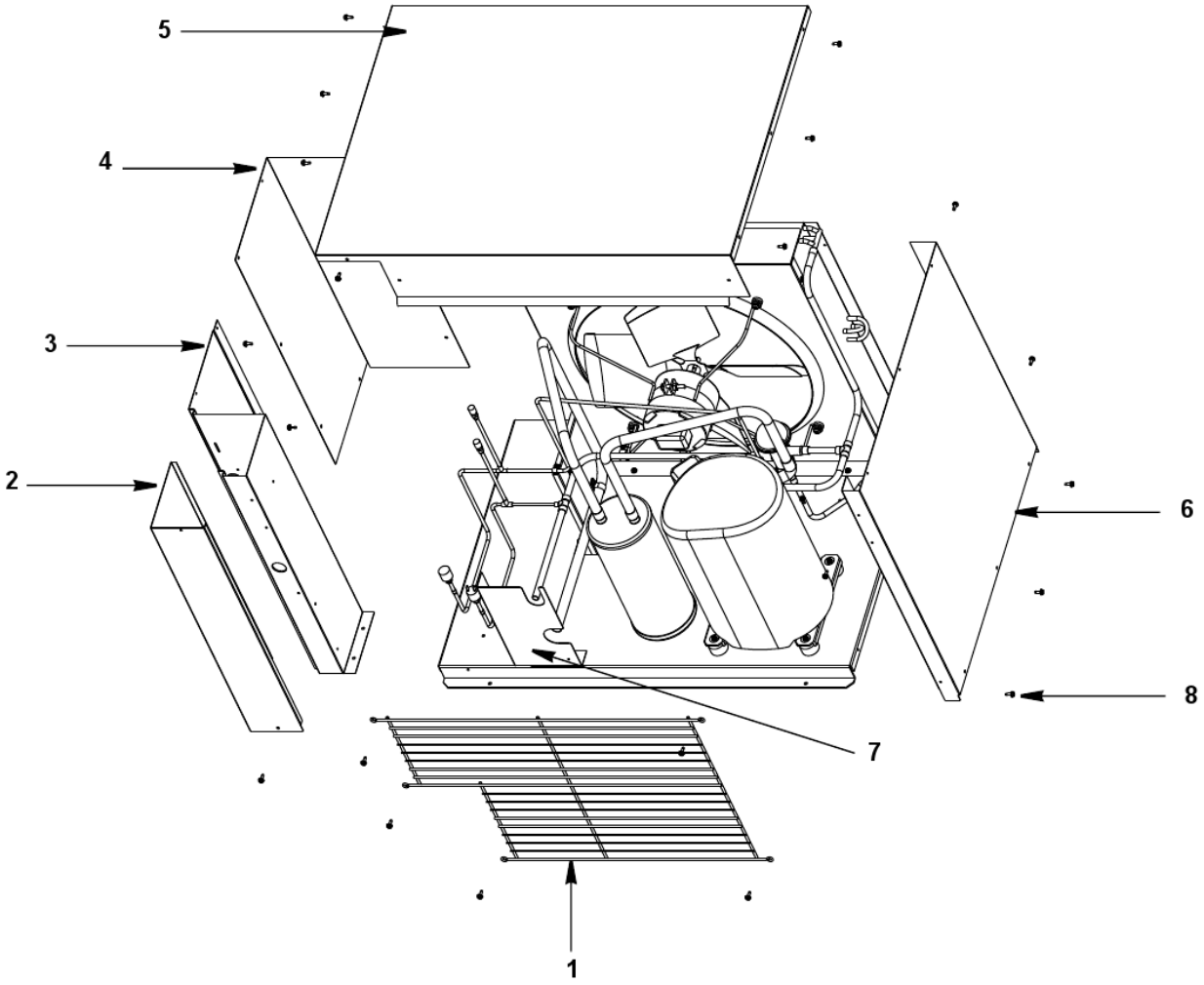

ICVD0696 CONDENSING UNIT - PANELS

#	PART #	DESCRIPTION	QTY	Note
1	3406893	Condenser Fan Guard		
2	6040171	Control Box Cover		
3	000006035	Control Box Panel		
4	6037051	Left Side Panel		
5	6034751	Cover Top		
6	6034701	Right Side Panel		
7	6042261	Condensing Unit Tube Shield		
8	5202069	Screw - #10-24 x 0.50" HEX		
9	5202069	Screw - #10-24 x 0.50" HEX		[1]
10	000000768	Cartoning		

PART NOTES:

[1] - Used for Panel Attachment