KS8951,2,5,8DL
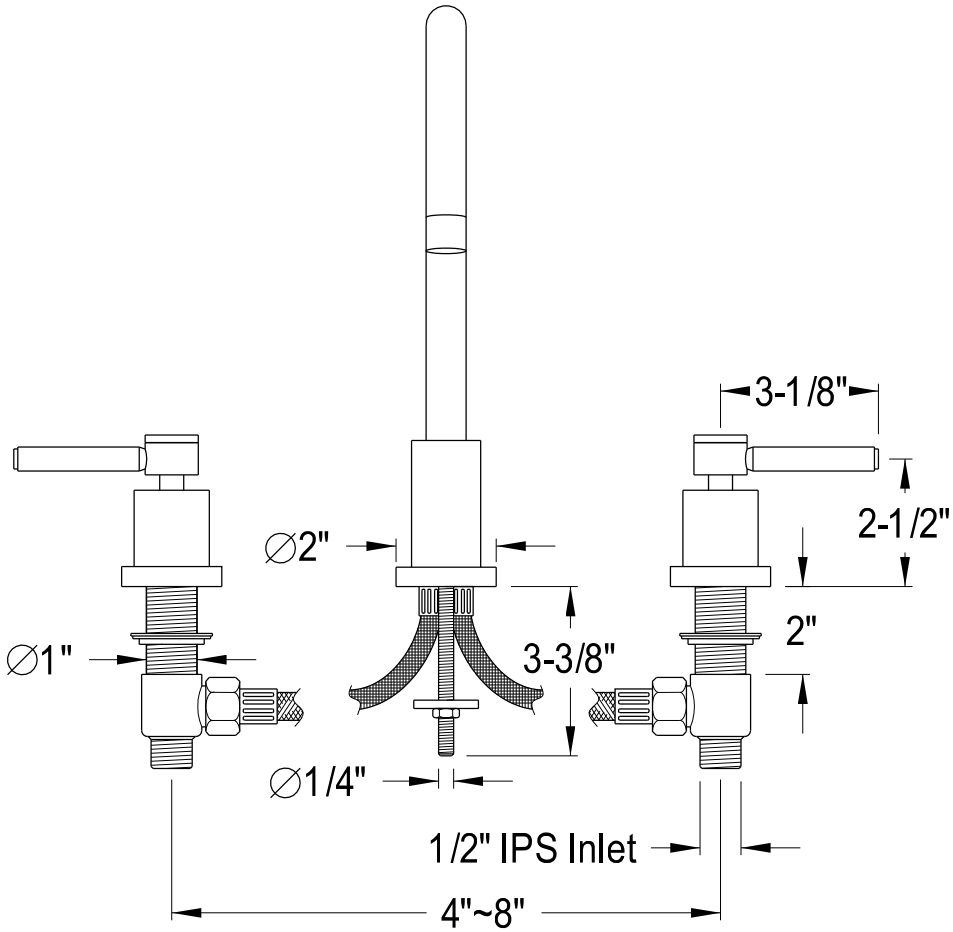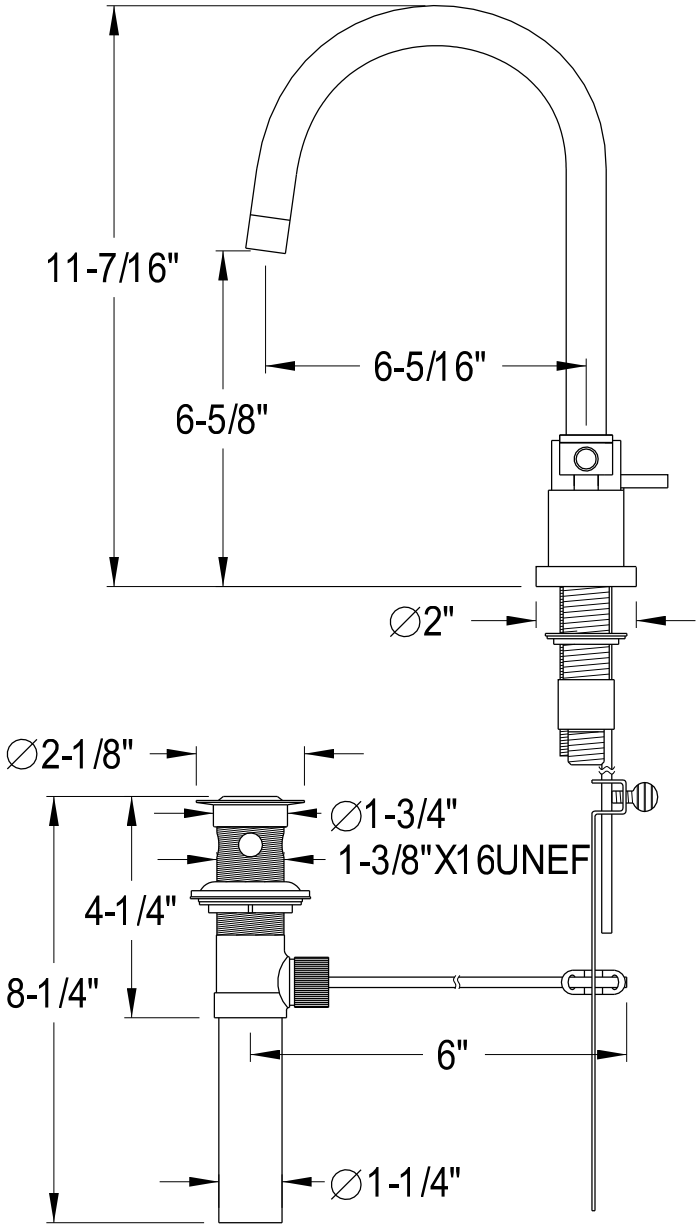
Mini Widespread Lavatory Faucet With Brass Pop-Up