KS8921,2,5,6,8DL

Widespread Lavatory Faucet With Brass Pop-Up

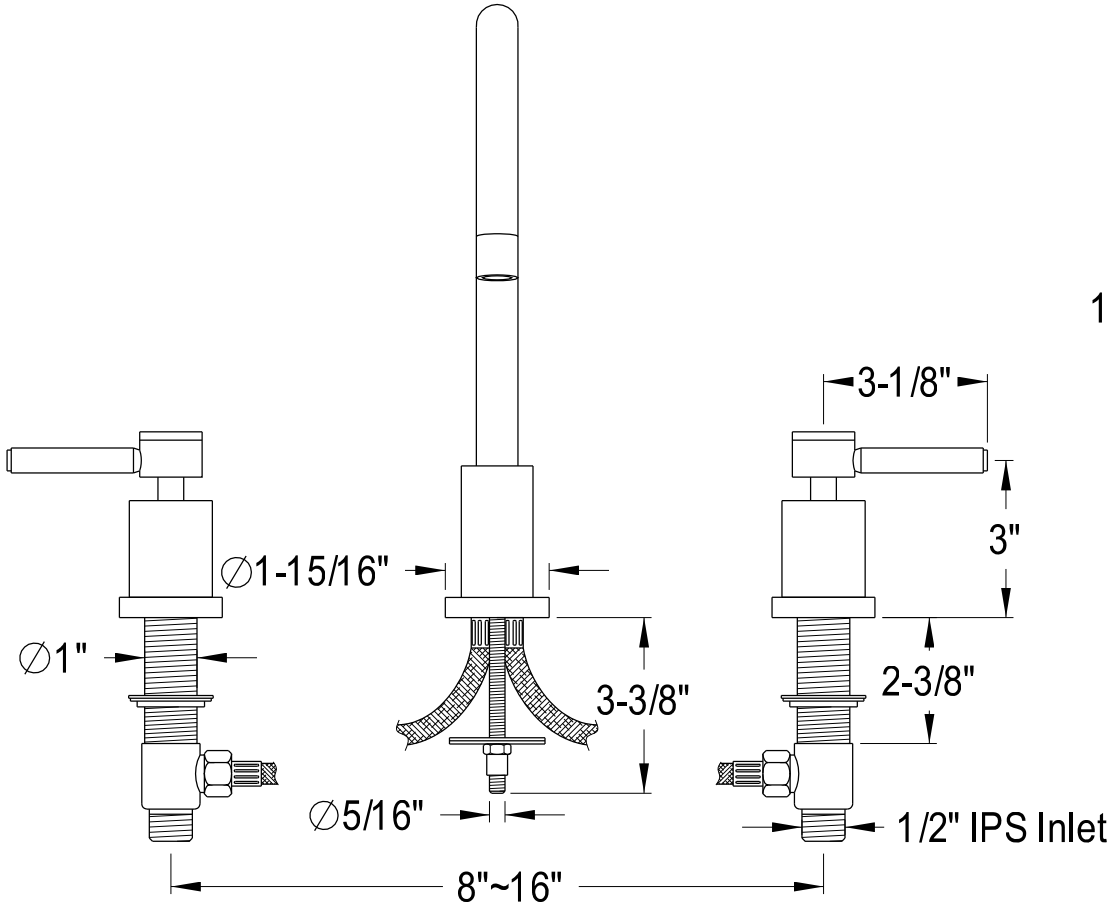

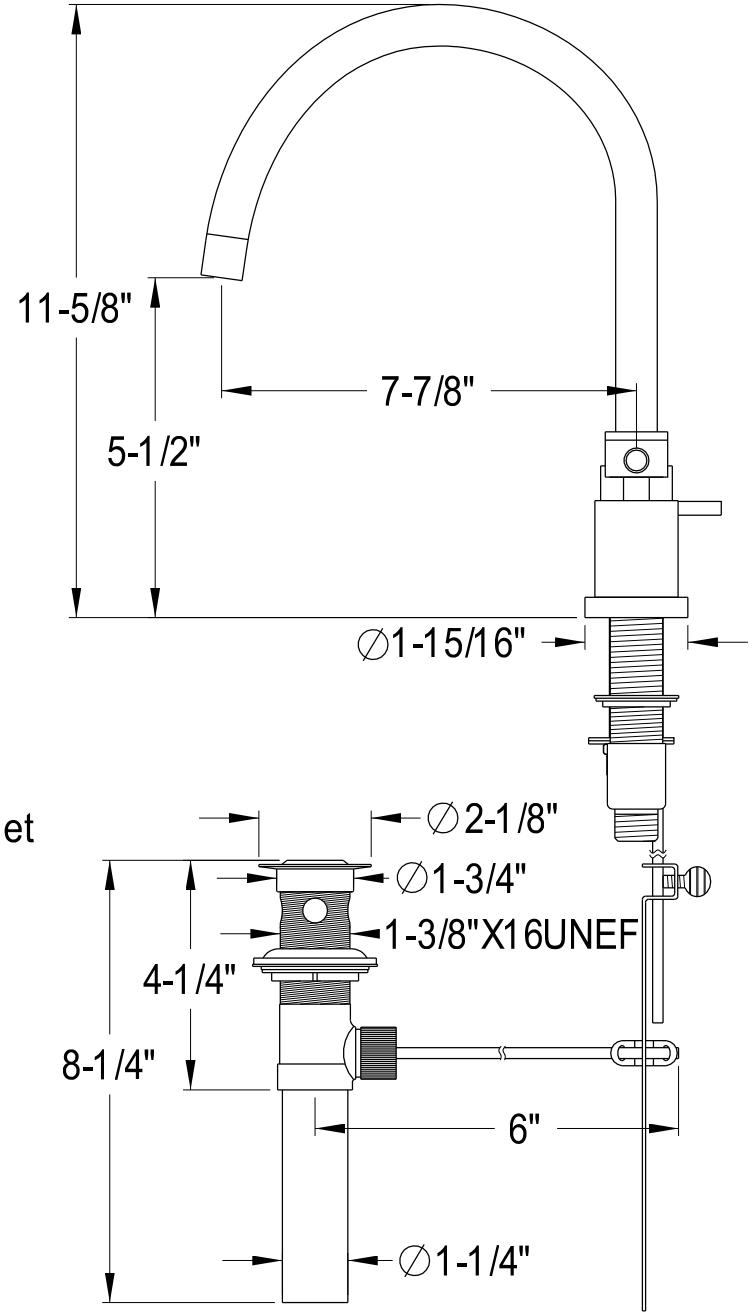

Ref# KS8921,2,5,6,8DL | 2014-04-B