KS8881,5,8DL
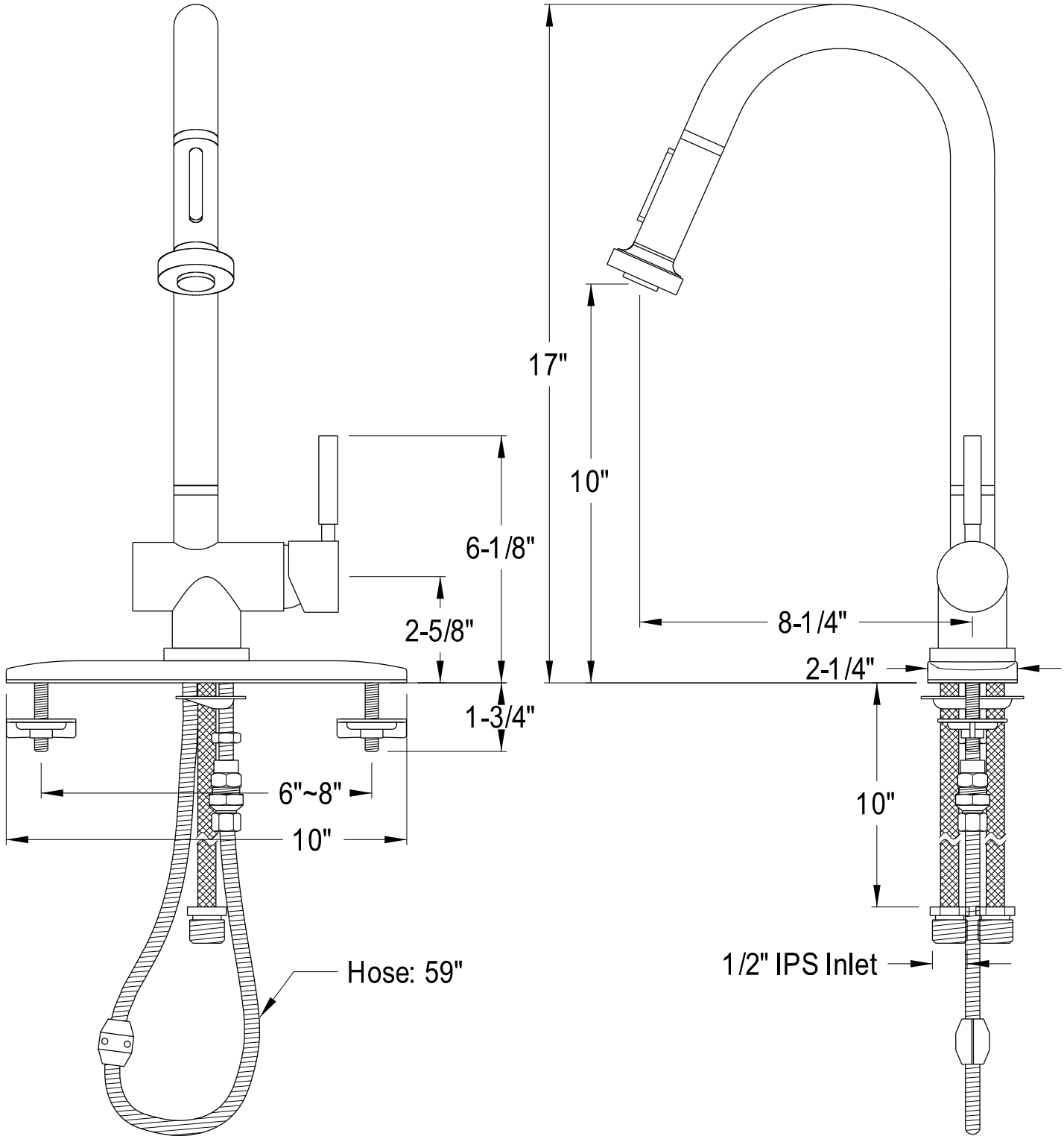
Single Handle Pull-Down Kitchen Faucet