KS4981,2,5,8CML
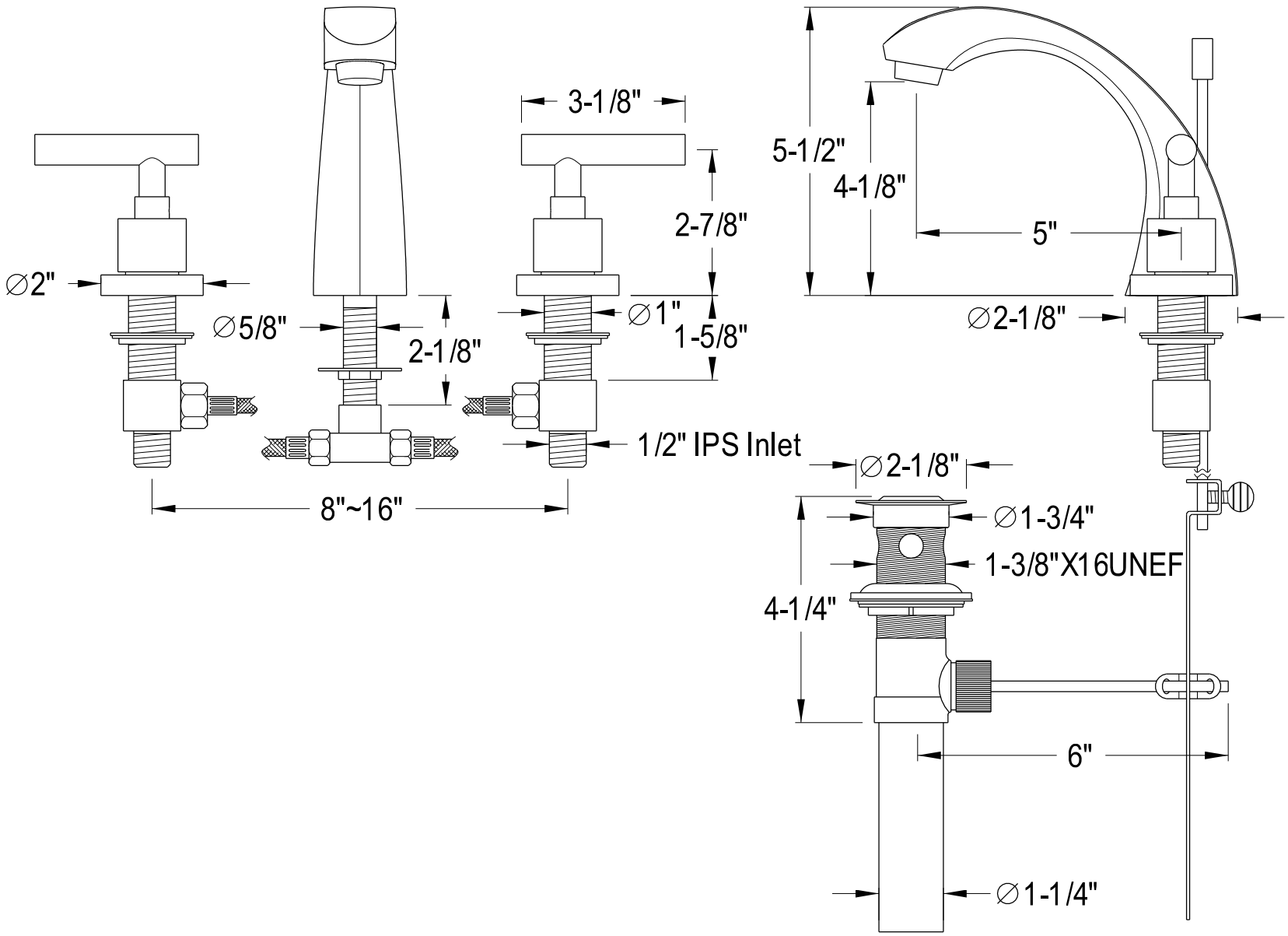
Widespread Lavatory Faucet With Brass Pop-Up