KB8981,2,5,8NDL

Widespread Lavatory Faucet With Brass Pop-Up

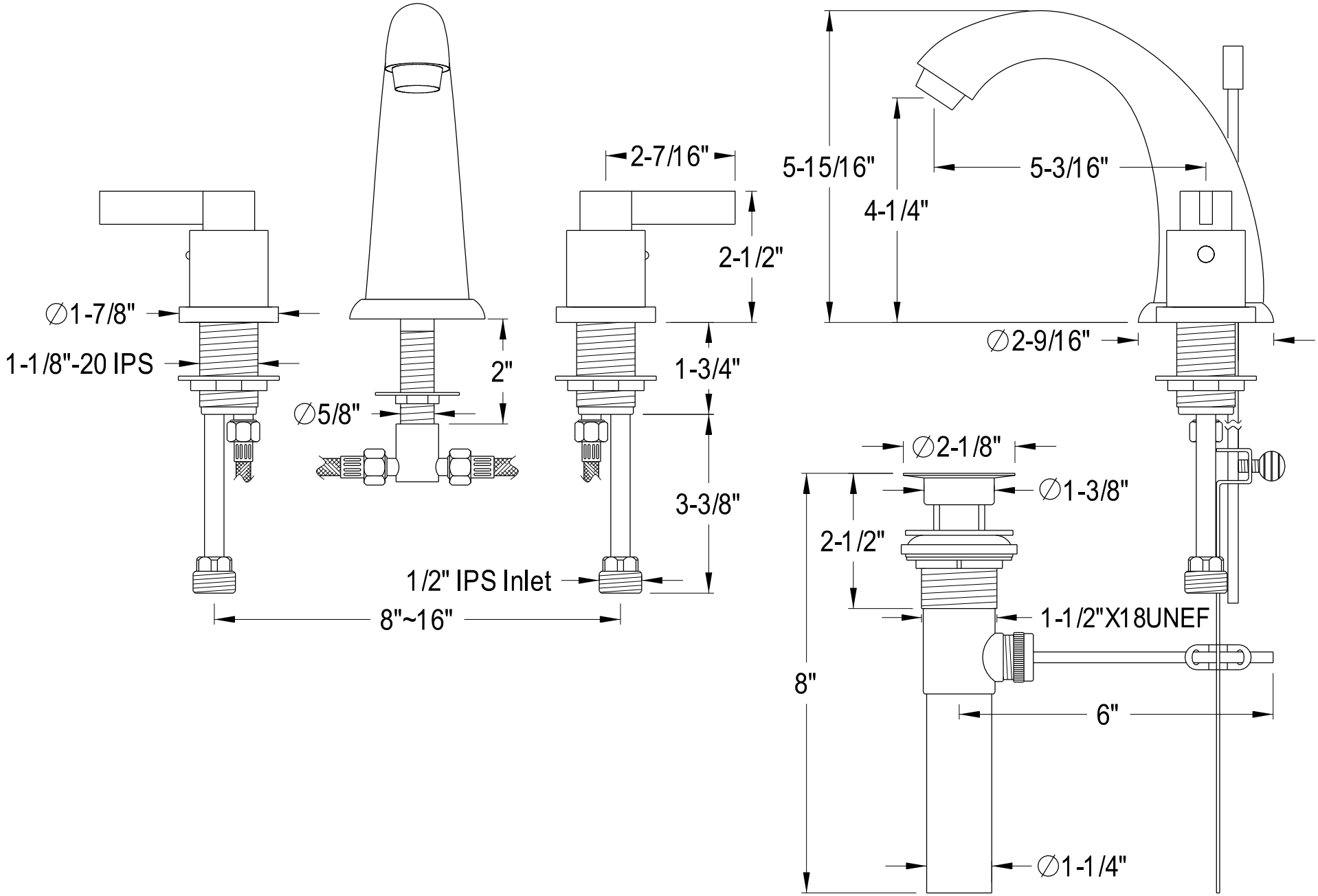

Ref# KB8981,2,5,8NDL | 2013-08-B