KB8361,2,3,5,8NFL
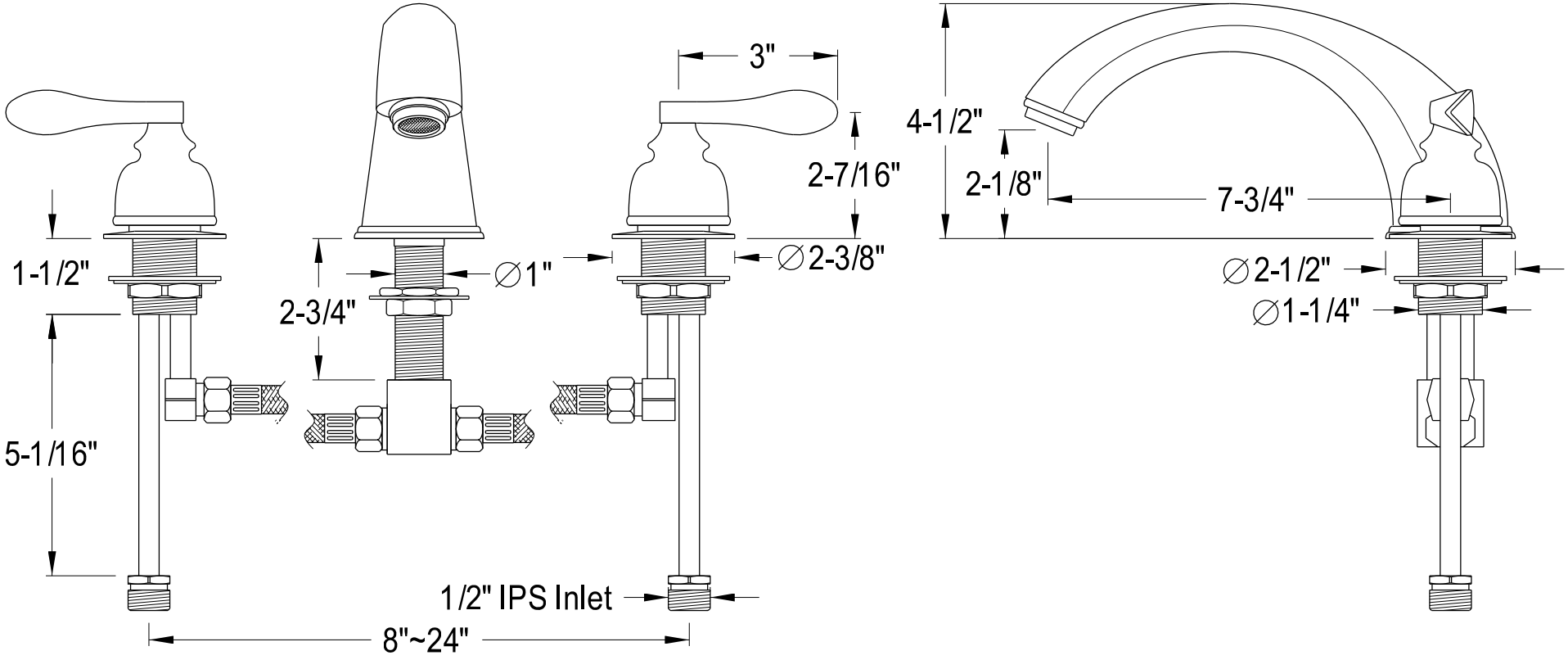
Roman Tub Filler Faucet