KB6631,2,5,8CML
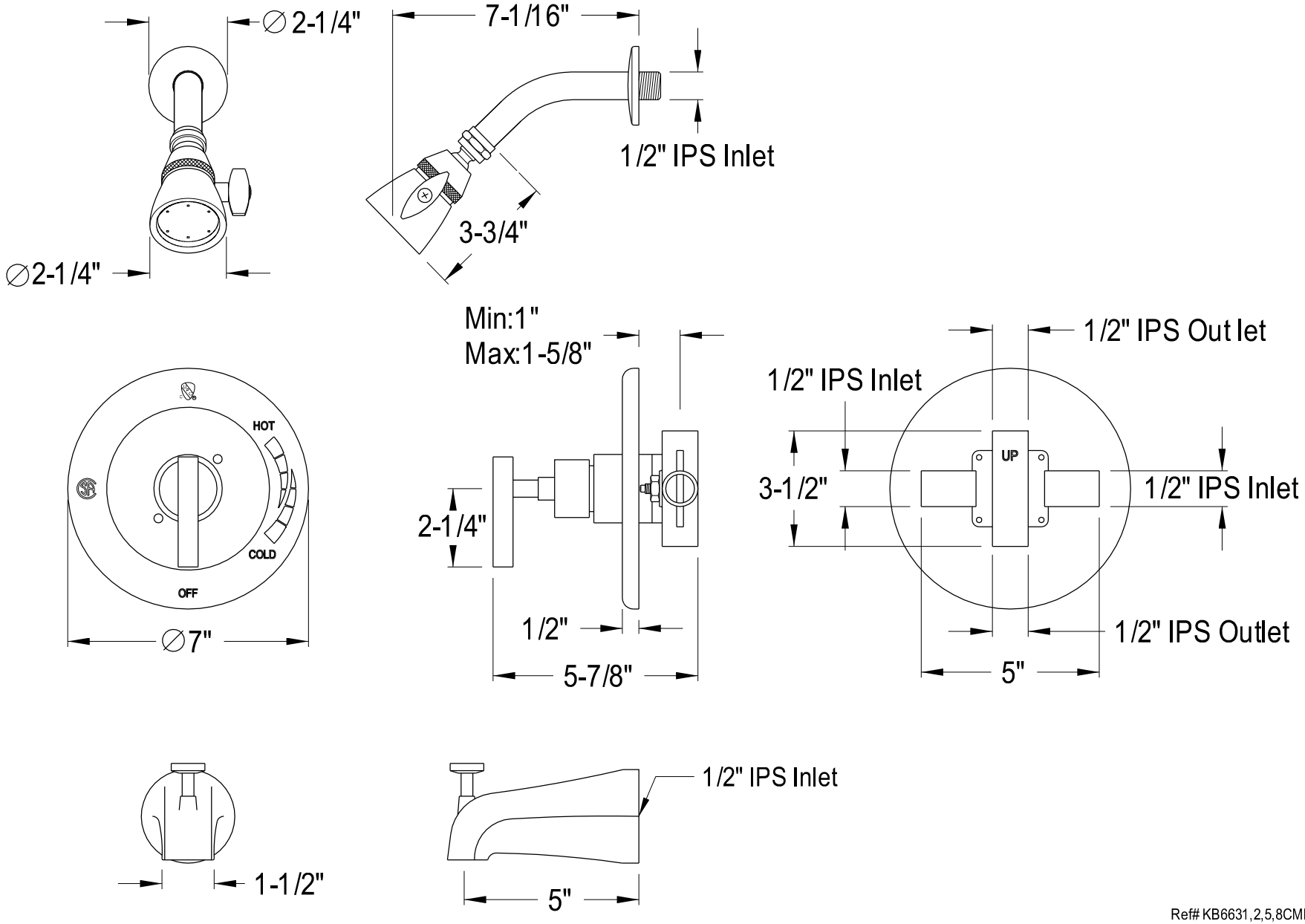
Single Handle Pressure Balanced Tub & Shower Faucet