HOSHIZAKI

Service Manual

Self-Contained Cubelet

Models
C-80BAK
C-80BAK-DS
C-80BAK-AD
C-80BAK-ADDS

hoshizakiamerica.com

Number: 73258
Issued: 4-22-2025
Revised: 8-7-2026

⚠ WARNING

Only qualified service technicians should install and service the appliance. To obtain the name and phone number of your local Hoshizaki Certified Service Representative, visit www.hoshizakiamerica.com. No service should be undertaken until the technician has thoroughly read this Service Manual. Failure to service and maintain the appliance in accordance with this manual will adversely affect safety, performance, component life, and warranty coverage and may result in costly water damage. Proper installation is the responsibility of the installer. Product failure or property damage due to improper installation is not covered under warranty.

Hoshizaki provides this manual primarily to assist qualified service technicians in the service of the appliance.

Should the reader have any questions or concerns which have not been satisfactorily addressed, please call, send an e-mail message, or write to the Hoshizaki Technical Support Department for assistance.

Phone: 1-800-233-1940; (770) 487-2331

E-mail: tech-support@hoshizaki.com

HOSHIZAKI AMERICA, INC.
618 Highway 74 South
Peachtree City, GA 30269
Attn: Hoshizaki Technical Support Department

NOTE: To expedite assistance, all correspondence/communication MUST include the following information:

- Model Number _____
- Serial Number _____
- Complete and detailed explanation of the problem.

IMPORTANT
This manual should be read carefully before the appliance is serviced. Read the warnings and guidelines contained in this manual carefully as they provide essential information for the continued safe use, service, and maintenance of the appliance. Retain this manual for any further reference that may be necessary.

CONTENTS

Important Safety Information 4
I. Construction and Water/Refrigeration Circuit Diagram 9
A. Construction 9
1. Icemaker 9
2. Ice Making Assembly 10
3. Water/Refrigeration Circuit Diagram 11
II. Sequence of Operation and Service Diagnosis 12
A. Sequence of Operation Flow Chart 12
1. Icemaker Flow Chart 12
2. Bin Control Shutdown Flow Chart 13
III. Service Diagnosis, Refrigeration Circuit Service, and Component Service 14
A. Safety Precautions When Servicing | Précautions de sécurité lors de l'entretien 14
1. English 14
2. Français 19
B. Service Diagnosis 24
1. Diagnostic Procedure 25
2. Bin Control Thermistor Check 29
3. Float Switch Check and Cleaning 30
4. Diagnostic Tables 32
5. Thermistor Control Board and Thermistor Control Board Layout 34
6. LED Lights 34
7. Control Switch 35
8. Time Delay Relay and Time Delay Relay Layout 35
9. Water Control Relay 35
C. Refrigeration Circuit Service 36
D. Component Service 40
IV. Maintenance 51
A. Maintenance Schedule 52
B. Optional Drain Pump HS-5061 53
1. Overview 53
2. Drain Pump Check 54
V. Preparing the Appliance for Periods of Non-Use 55
VI. Decommissioning and Disposal 57
VII. Technical Information 60
A. Specification and Performance Data 61
B. Wiring Diagrams 62
1. C-80BAK(-DS)(-AD)(-ADDS) 62
2. Optional Drain Pump HS-5061 63

Important Safety Information

Throughout this manual, notices appear to bring your attention to situations which could result in death, serious injury, damage to the appliance, or damage to property.

	R-290 Class A3 Flammable Refrigerant Used
⚠ DANGER	**Indicates a hazardous situation that, if not avoided, will result in death or serious injury.**
⚠ WARNING	**Indicates a hazardous situation that, if not avoided, could result in death or serious injury.**
NOTICE	**Indicates a situation that, if not avoided, could result in damage to the appliance or property.**
IMPORTANT	**Indicates important information about the use and care of the appliance.**

⚠ DANGER

Risk of Fire or Explosion
Flammable Refrigerant Used

- Qualified service technicians are those having the appropriate technical training and experience necessary to be aware of hazards to which they are exposed in performing a task and of measures necessary to minimize the danger to themselves or other persons.
- No service should be undertaken until the technician has thoroughly read this Service Manual. All safety precautions must be followed.
- This appliance to be installed in accordance with the Safety Standard for Refrigeration Systems ANSI/ASHRAE 15.
- Follow handling instructions carefully in compliance with national regulations.
- Do not use mechanical devices or other means to accelerate the defrosting process or to clean, other than those recommended by the manufacturer.
- Do not puncture refrigerant tubing. Risk of fire or explosion due to puncture of refrigerant tubing; follow handling instructions carefully.
- Servicing shall be done by trained service personnel with certified competence in handling flammable refrigerants to minimize the risk of possible ignition due to incorrect parts or improper service.
- Component parts shall be replaced with like components so as to minimize the risk of possible ignition due to incorrect parts.
- Dispose of properly in accordance with federal or local regulations.
- Do not pierce or burn.
- Be aware that refrigerants may not contain an odor.
- Do not damage the refrigeration circuit.
- See nameplate for R-290 refrigerant charge:
  - If greater than 114 g (4 oz.), do not install in public corridor or lobby.
  - If greater than 152 g (5.3 oz.), do not install within 6 m (20 ft) of open flame.
- The appliance shall be stored in a room without continuously operating ignition sources (for example: open flames, an operating gas appliance, or an operating electric heater).

⚠ DANGER continued

- Do not place any potential ignition sources in or near the appliance.
- Keep clear of obstruction all ventilation openings in the appliance enclosure or in the structure for building-in.
- No potential sources of ignition are to be used in the searching for or detection of refrigerant leaks.
- Do not use electrical appliances inside the appliance unless they are of the type recommended by the manufacturer.
- Do not store explosive substances such as aerosol cans with a flammable propellant in this appliance.
- Check that cabling will not be subject to wear, corrosion, excessive pressure, vibration, sharp edges, or any other adverse environmental effects. The check shall also take into account the effects of aging or continual vibration from sources such as compressors or fans.
- Ensure that the area is in the open or that it is adequately ventilated before breaking into the system or conducting any hot work. A degree of ventilation shall continue during the period that the work is carried out. The ventilation should safely disperse any released refrigerant and preferably expel it externally into the atmosphere.

Risque D'Incendie ou D'Explosion Fluide Frigorigène Inflammable Utilisé

- Les techniciens de service qualifiés sont ceux qui possèdent la formation technique et l'expérience nécessaires pour être conscients des dangers auxquels ils sont exposés dans l'accomplissement d'une tâche et des mesures nécessaires pour réduire au minimum le danger pour eux-mêmes ou pour d'autres personnes.
- Aucune opération d'entretien ne doit être entreprise avant que le technicien n'ait lu attentivement ce manuel. Toutes les précautions de sécurité doivent être suivies.
- Cet appareil doit être installé conformément à la norme de sécurité pour les systèmes de réfrigération ANSI/ASHRAE 15.
- Suivez attentivement les instructions de manutention conformément aux réglements nationaux.
- Ne pas utiliser de dispositifs mécaniques ou d'autres moyens pour accélérer le processus de dégivrage ou pour nettoyer, autres que ceux recommandés par le fabricant.
- Ne pas perforer la conduite de fluide frigorigène. Risque d'incendie ou d'explosion en cas de perforation d'une canalisation de fluide frigorigène; suivez attentivement les instructions de manutention.
- L'entretien doit être effectué par du personnel formé et certifié pour la manipulation de réfrigérants inflammables afin de réduire au minimum le risque d'inflammation dû à des pièces incorrectes ou à un entretien inadéquat.
- Les pièces doivent être remplacées par des pièces similaires, de manière à réduire au minimum le risque d'inflammation dû à des pièces incorrectes.

⚠ DANGER continued

- Mettre au rebut conformément aux réglements fédéraux ou locaux.
- Ne pas percer ou brûler.
- Attention, les fluides frigorigénes peuvent ne pas dégager d'odeur.
- Ne pas endommager les composants du circuit de réfrigération.
- Voir plaque signalétique pour la charge de réfrigérant R-290:
  - Si elle est supérieure à 114 g (4 oz.), ne pas l'installer dans un couloir public ou un hall d'entrée.
  - Si elle est supérieure à 152 g (5,3 oz.), ne pas l'installer à moins de 6 m (20 pi) d'une flamme nue.
- L'appareil doit être entreposé dans un local ne contenant pas de sources d'inflammation permanentes (flammes nues, appareil à gaz ou dispositif de chauffage électrique en fonctionnement, par exemple).
- Ne placer aucune source d'inflammation potentielle à l'intérieur ou à proximité de l'appareil.
- Ne pas obstruer les ouvertures de ventilation dans l'enceinte de l'appareil ou dans la structure d'encastrement.
- Aucune source potentielle d'inflammation ne doit être utilisée pour rechercher ou détecter des fuites de réfrigérant.
- Ne pas utiliser d'appareils électriques à l'intérieur de l'appareil, sauf s'ils sont du type recommandé par le fabricant.
- Ne pas entreposer dans cet appareil des substances explosives telles que des bombes aérosols contenant un gaz propulseur inflammable.
- Vérifier que le câblage ne sera pas soumis à l'usure, à la corrosion, à une pression excessive, à des vibrations, à des arêtes vives ou à tout autre effet environnemental négatif. Le contrôle doit également prendre en compte les effets du vieillissement ou des vibrations continues provenant de sources telles que les compresseurs ou les ventilateurs.
- S'assurer que la zone est à l'air libre ou qu'elle est correctement ventilée avant de pénétrer dans le système ou d'effectuer un travail à chaud. Une certaine ventilation doit être maintenue pendant la durée des travaux. La ventilation doit permettre de disperser en toute sécurité tout réfrigérant libéré et, de préférence, de l'expulser dans l'atmosphère.

⚠ WARNING

The appliance should be destined only to the use for which it has been expressly conceived. Any other use should be considered improper and therefore dangerous. The manufacturer cannot be held responsible for injury or damage resulting from improper, incorrect, and unreasonable use. Failure to service and maintain the appliance in accordance with this manual will adversely affect safety, performance, component life, and warranty coverage and may result in costly water damage.

To reduce the risk of death, electric shock, serious injury, or fire, follow basic precautions including the following:

- This appliance is not intended for use above 7,000 m (22,965 ft). Installation above 7,000 m (22,965 ft) may adversely affect safety, performance, and component life.
- Wear appropriate personal protective equipment (PPE) when servicing the appliance.
- The appliance must be installed in accordance with applicable national, state, and local codes and regulations. Failure to meet these code requirements could result in death, electric shock, serious injury, fire, or damage.
- The appliance requires an independent power supply of proper capacity. See the nameplate for electrical specifications. Failure to use an independent power supply of proper capacity can result in a tripped breaker, blown fuse, damage to existing wiring, or component failure. This could lead to heat generation or fire.
- Risk of electric shock. Use extreme caution and exercise safe electrical practices.
- Risk of electric shock. Control switch in "OFF" position does not de-energize all loads (optional drain pump).
- Moving parts (e.g., fan blade) can crush and cut. Keep hands clear.
- **THE APPLIANCE MUST BE GROUNDED.** The appliance is equipped with a NEMA 5-15 three-prong grounding plug to reduce the risk of potential shock hazards. It must be plugged into a properly grounded, independent 3-prong wall outlet. If the outlet is a 2-prong outlet, it is your personal responsibility to have a qualified electrician replace it with a properly grounded, independent 3-prong wall outlet. Do not remove the ground prong from the power cord and do not use an adapter plug. Failure to follow these instructions may result in death, electric shock, or fire.
- To reduce the risk of electric shock, do not touch the control switch or plug with damp hands.
- To reduce the risk of electric shock, make sure the control switch is in the "OFF" position before plugging in or unplugging the appliance.
- Unplug the appliance before servicing.
- Do not use an appliance with a damaged power cord. The power cord should not be altered, jerked, bundled, weighed down, pinched, or tangled. Such actions could result in electric shock or fire. To unplug the appliance, be sure to pull the plug, not the cord, and do not jerk the cord.
- Do not use an extension cord.
- If the supply cord is damaged, it must be replaced by the manufacturer, its service agent, or similarly qualified persons in order to avoid a hazard. Upon replacement, the GREEN ground wire in the power cord must be connected to the designated grounding screw.
- Do not make any alterations to the appliance. Alterations could result in electric shock, injury, fire, or damage to the appliance.
- Appliance is heavy. Use care when lifting or positioning. Work in pairs when needed to prevent injury or damage.

⚠ WARNING continued

- The appliance is not intended for use by persons (including children) with reduced physical, sensory, or mental capabilities, or lack of experience and knowledge, unless they have been given supervision or instruction concerning use of the appliance by a person responsible for their safety.
- Do not splash, pour, or spray water directly onto or into the appliance. This might cause short circuit, electric shock, corrosion, or failure.
- Children should be supervised to ensure that they do not play with the appliance.
- Do not climb, stand, or hang on the appliance or drawers or allow children or animals to do so. Do not climb into the appliance or allow children or animals to do so. Death or serious injury could occur or the appliance could be damaged.
- Open and close the door with care. Door opened too quickly or forcefully may cause injury or damage to the appliance or surrounding equipment.
- Be careful not to pinch fingers when opening and closing the door. Be careful when opening and closing the door when children are in the area.
- Do not use combustible spray or place volatile or flammable substances in or near the appliance. They might catch fire.
- Keep the area around the appliance clean. Dirt, dust, or insects in the appliance could cause harm to individuals or damage to the appliance.

NOTICE

- Follow the water supply, drain connection, and maintenance instructions in the instruction manual carefully to reduce the risk of costly water damage.
- In areas where water damage is a concern, install in a contained area with a floor drain.

NOTICE continued

- Install the appliance in a location that stays above freezing. Normal operating ambient temperature must be within 45°F to 100°F (7°C to 38°C).
- If using the optional drain pump (HS-5061), test its operation every time the appliance is cleaned and sanitized. See "IV.B. Optional Drain Pump HS-5061" for details. If the optional drain pump is not operating properly, water could back up and overflow, leading to costly water damage.
- To help ensure that the ice storage bin drain remains clear, follow the Ice Storage Bin Drain instructions in the instruction manual once every 3 months or as often as necessary for conditions. If the ice storage bin drain becomes clogged, water could build up in the bin and overflow, leading to costly water damage.
- Do not leave the appliance on during extended periods of non-use, extended absences, or in sub-freezing temperatures. To properly prepare the appliance for these occasions, follow the instructions in "V. Preparing the Appliance for Periods of Non-Use."
- If water collects in the bin and will not drain, turn off the appliance and close the water supply line shut-off valve.
- If water seeps from the base of the appliance, turn off the appliance and close the water supply line shut-off valve. Failure to do so could lead to costly water damage.
- Do not place objects on top of the appliance.
- The ice storage bin is for ice use only. Do not store anything else in the ice storage bin.
- Protect the floor when moving the appliance to prevent damage to the floor.
- Do not allow the appliance to bear any outside weight.

I. Construction and Water/Refrigeration Circuit Diagram

A. Construction

1. Icemaker

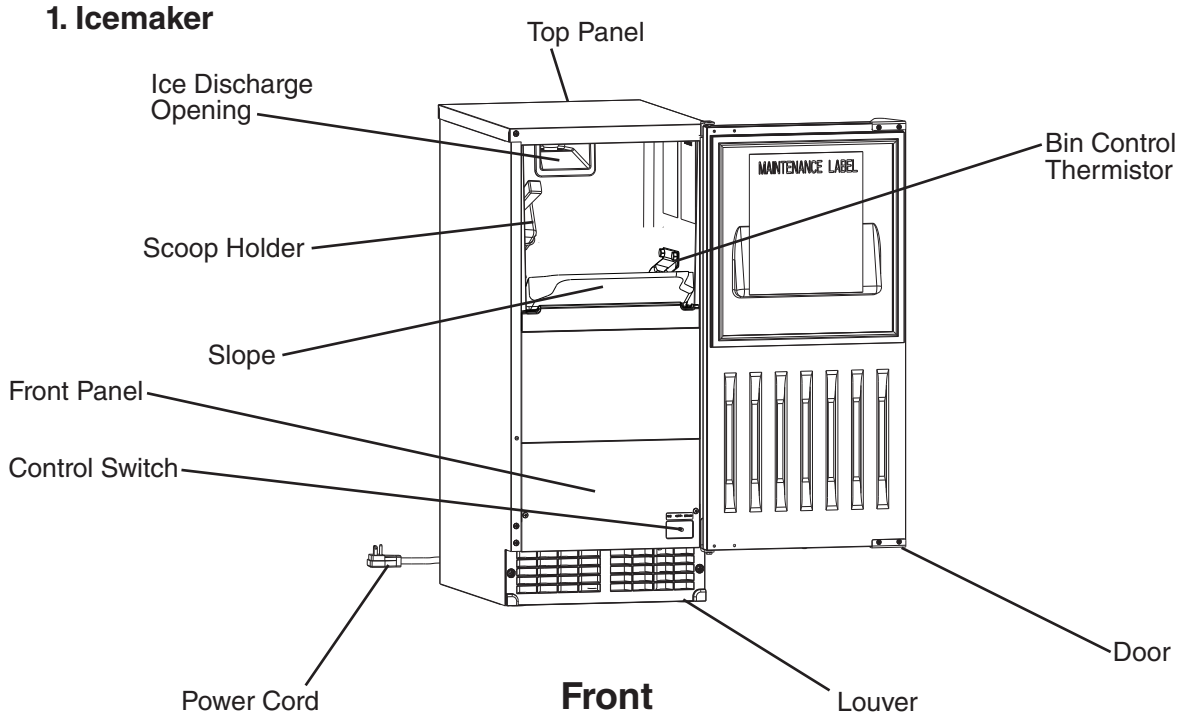

Front

C-80BAK Shown

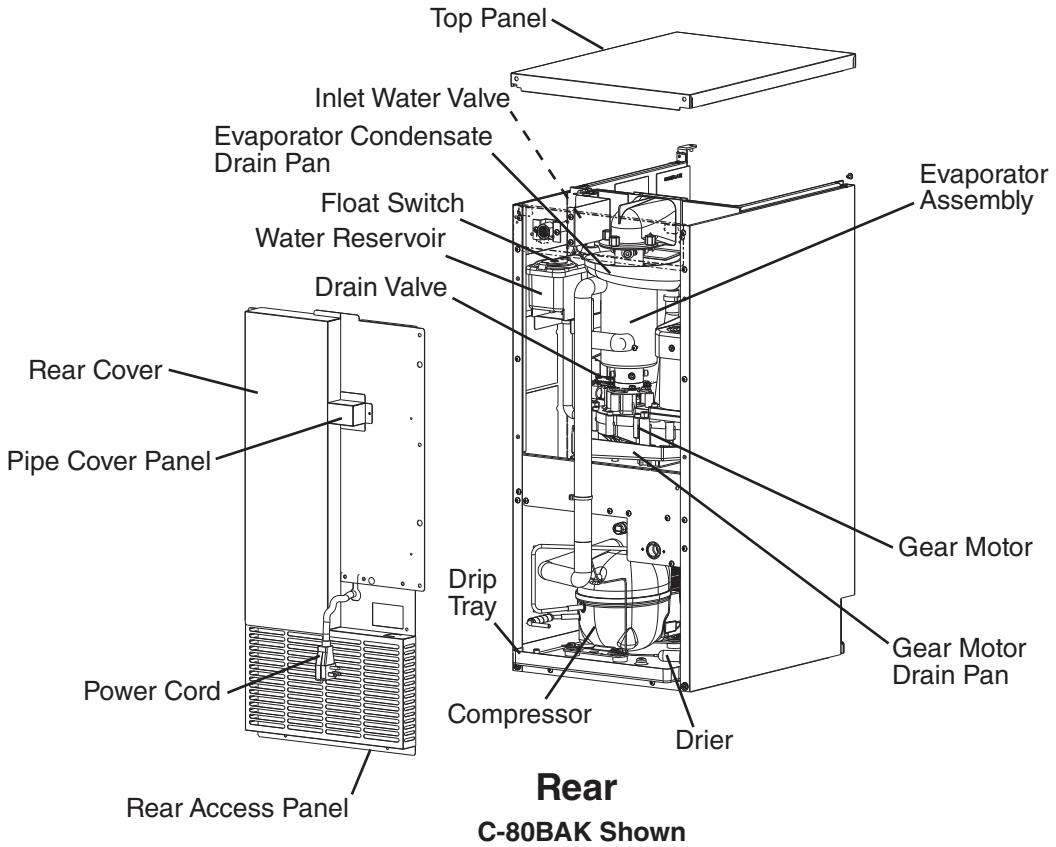

Rear

C-80BAK Shown

2. Ice Making Assembly

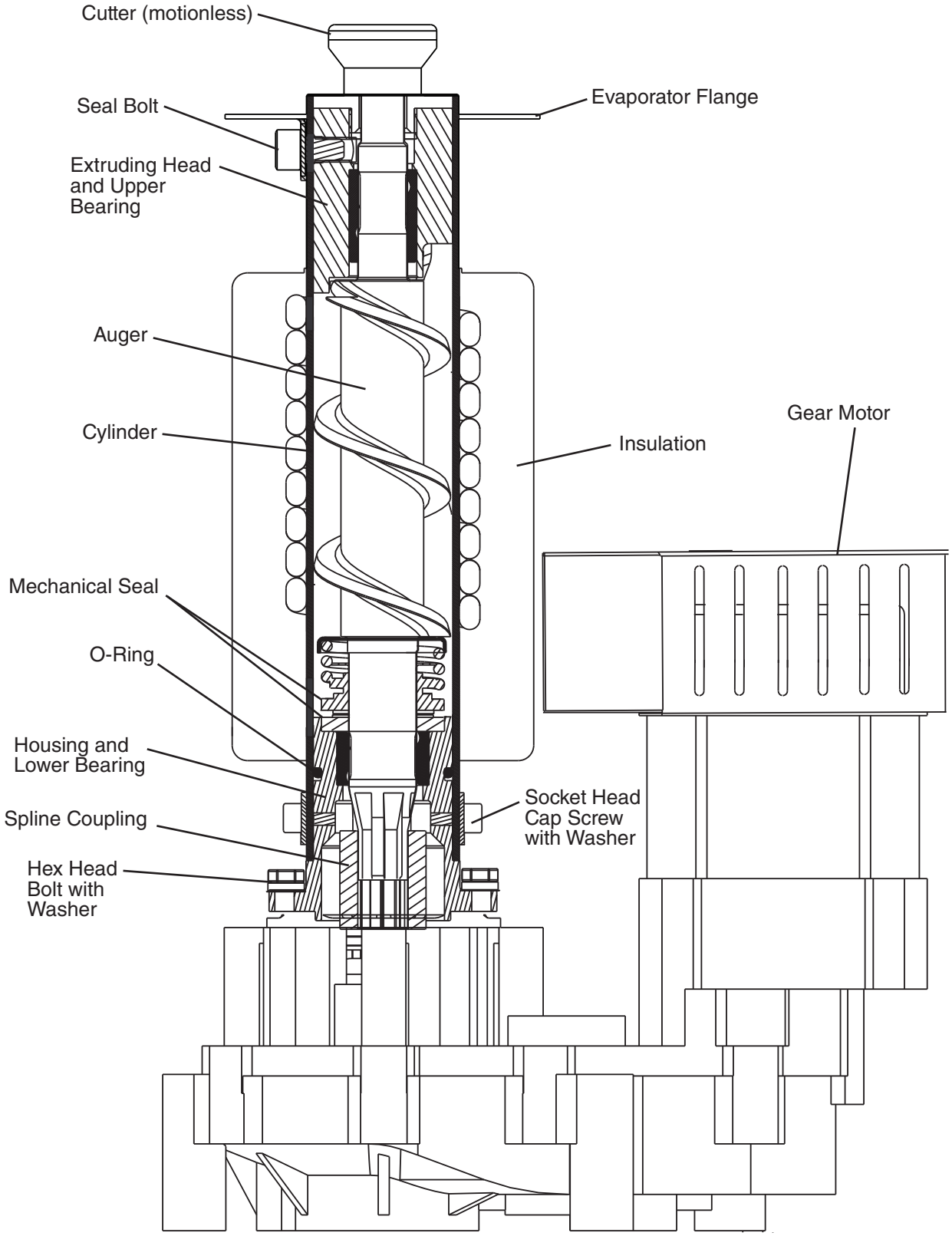

3. Water/Refrigeration Circuit Diagram

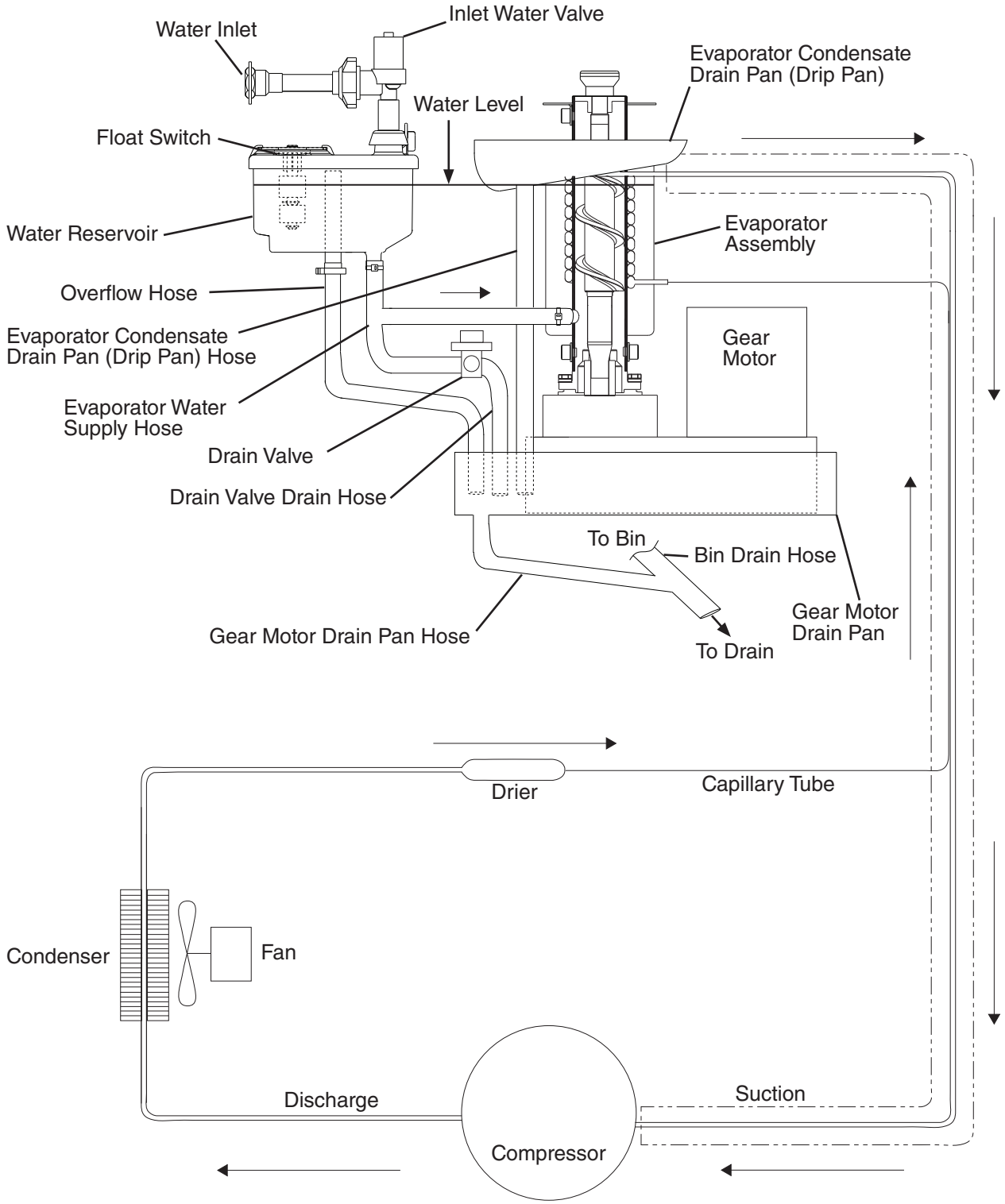

II. Sequence of Operation and Service Diagnosis

A. Sequence of Operation Flow Chart

1. Icemaker Flow Chart

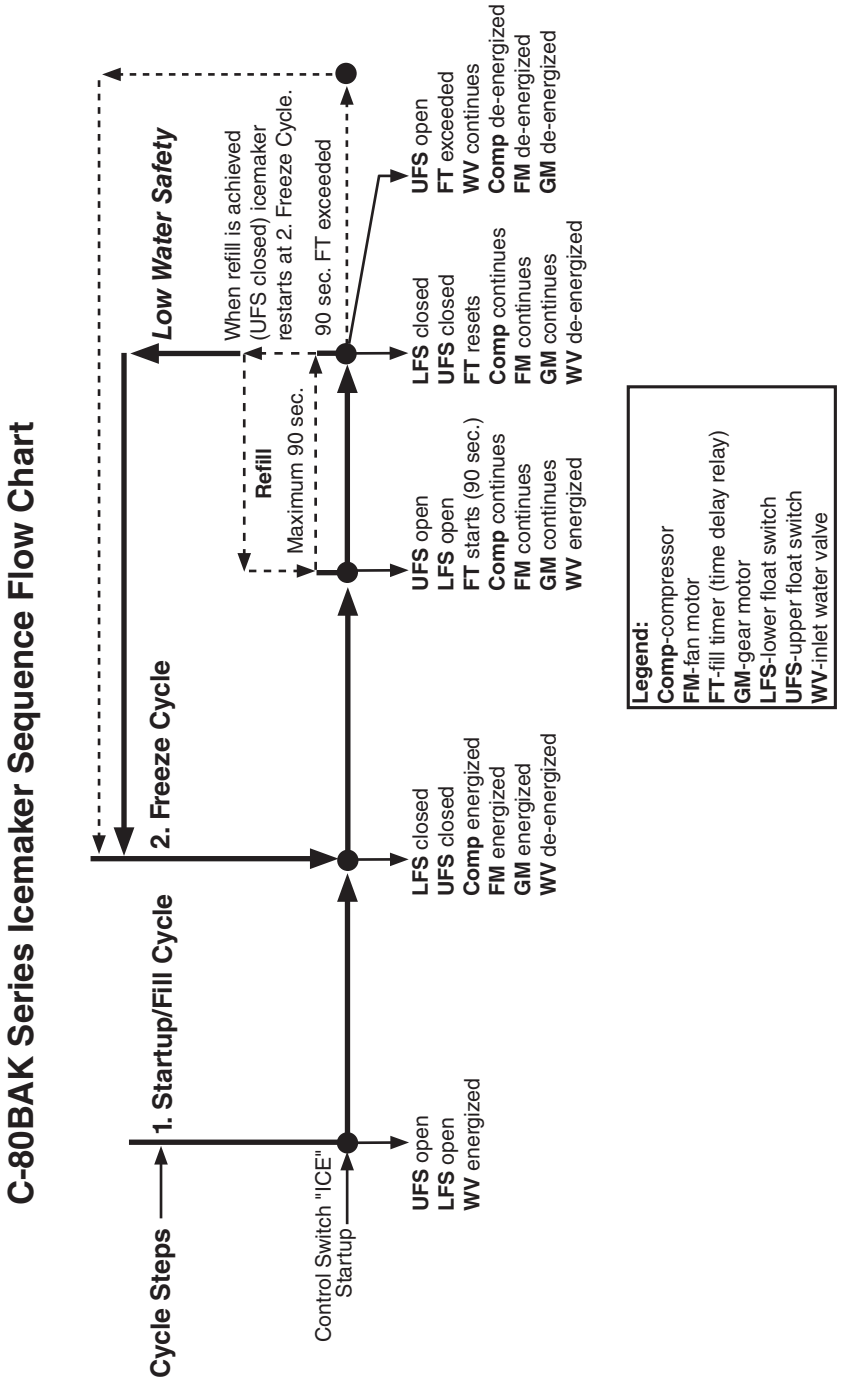

2. Bin Control Shutdown Flow Chart

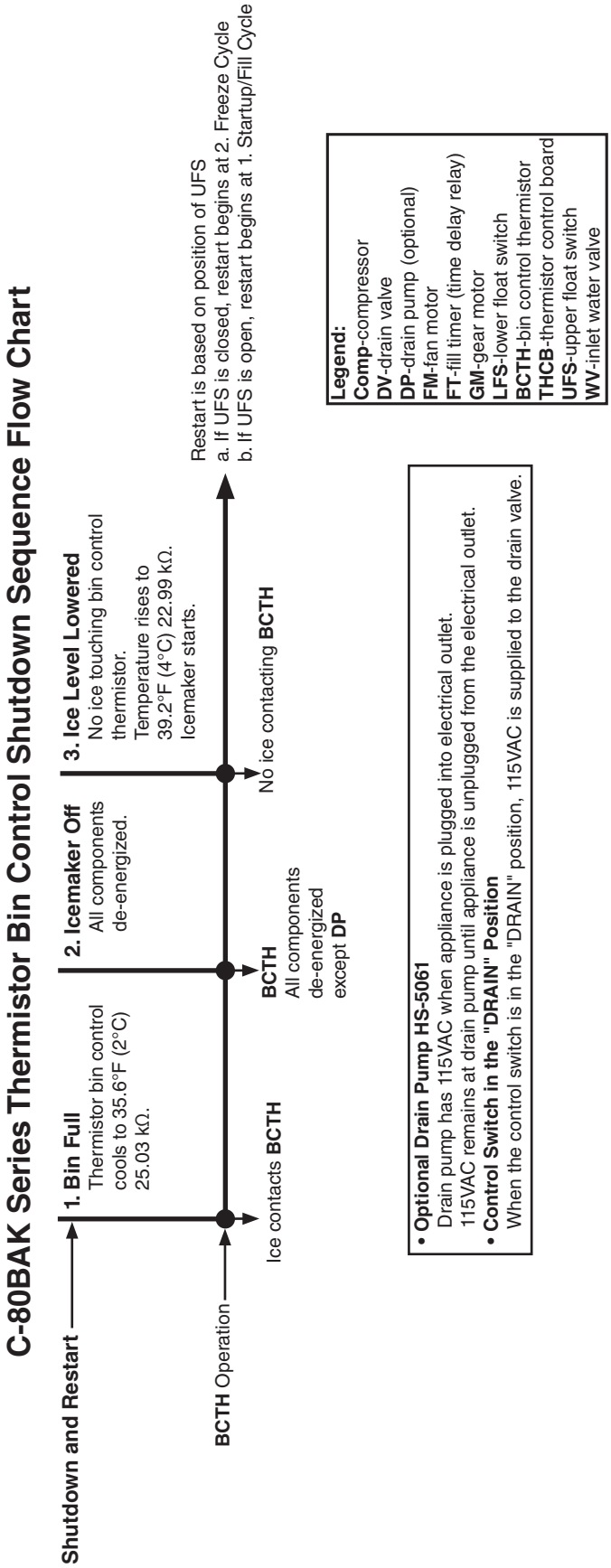

III. Service Diagnosis, Refrigeration Circuit Service, and Component Service

A. Safety Precautions When Servicing | Précautions de sécurité lors de l'entretien

1. English

R-290 Class A3 Flammable Refrigerant Used

⚠ DANGER

Risk of Fire or Explosion. Flammable Refrigerant Used.

- Be sure to follow all Important Safety Information located at the beginning of this manual and in this section.
- The appliance should be diagnosed and repaired only by qualified service personnel to reduce the risk of death, electric shock, serious injury, or fire.
- Servicing shall be done by trained service personnel with certified competence in handling flammable refrigerants to minimize the risk of possible ignition due to incorrect parts or improper service.
- Follow handling instructions carefully in compliance with national regulations.
- Do not use mechanical devices or other means to accelerate the defrosting process or to clean, other than those recommended by the manufacturer.
- Be aware that refrigerants may not contain an odor.
- Do not puncture refrigerant tubing. Risk of fire or explosion due to puncture of refrigerant tubing; follow handling instructions carefully.
- Component parts shall be replaced with like components. So as to minimize the risk of possible ignition due to incorrect parts.
- Do not place any potential ignition sources in or near the appliance.
- Prior to beginning work on systems containing flammable refrigerants, safety checks are necessary to ensure that the risk of ignition is minimized.
- All maintenance staff and others working in the local area shall be instructed on the nature of work being carried out. Work in confined spaces shall be avoided.
- Work shall be undertaken under a controlled procedure so as to minimize the risk of a flammable gas or vapor being present while the work is being performed.
- The area shall be checked with an appropriate refrigerant detector prior to and during work, to ensure the technician is aware of potentially toxic or flammable atmospheres.
- Ensure that the leak detection equipment being used is suitable for use with all applicable refrigerants, i.e., nonsparking, adequately sealed, or intrinsically safe. NOTE: The use of silicone sealant can inhibit the effectiveness of some types of leak detection equipment.

⚠ DANGER continued

- Under no circumstances shall potential sources of ignition be used in the searching for or detection of refrigerant leaks. A halide torch (or any other detector using a naked flame) shall not be used. • The following leak detection methods are deemed acceptable for all refrigerant systems:
  - Electronic leak detectors may be used to detect refrigerant leaks but, in the case of flammable refrigerants, the sensitivity might not be adequate, or might need recalibration. (Detection equipment shall be calibrated in a refrigerant-free area.) Ensure that the detector is not a potential source of ignition and is suitable for the refrigerant used. Leak detection equipment shall be set at a percentage of the LFL of the refrigerant and shall be calibrated to the refrigerant employed, and the appropriate percentage of gas (25% maximum) is confirmed.
  - Leak detection fluids are also suitable for use with most refrigerants but the use of detergents containing chlorine shall be avoided as the chlorine can react with the refrigerant and corrode the copper pipe-work.

    Note: Examples of leak detection fluids are:
    - bubble method
    - fluorescent method agents
- If any hot work is to be conducted on the refrigerating equipment or any associated parts, appropriate fire extinguishing equipment shall be available on hand. A dry chemical or CO_2 fire extinguisher should be adjacent to the charging area. You must have a Class B chemical fire extinguisher available at all times.
- No person carrying out work in relation to a refrigerating system which involves exposing any pipe work shall use any sources of ignition in such a manner that it may lead to the risk of fire or explosion. All possible ignition sources, including cigarette smoking, should be kept sufficiently far away from the site of installation, repairing, removing, and disposal, during which refrigerant can possibly be released to the surrounding space. Prior to work taking place, the area around the equipment shall be surveyed to make sure that there are no flammable hazards or ignition risks. “No Smoking” signs shall be displayed.
- Ensure that the area is in the open or that it is adequately ventilated before breaking into the system or conducting any hot work. A degree of ventilation shall continue during the period that the work is carried out. The ventilation should safely disperse any released refrigerant and preferably expel it externally into the atmosphere.
- When breaking into the refrigerant circuit to make repairs – or for any other purpose – conventional procedures shall be used. However, for flammable refrigerants it is important that best practice be followed, since flammability is a consideration. The following procedure shall be adhered to:
  - safely remove refrigerant following local and national regulations
  - purge the circuit with inert gas
  - evacuate (optional for A2L)
  - purge with inert gas (optional for A2L)
  - open the circuit by cutting

⚠ DANGER continued

- If a leak is suspected, all naked flames shall be removed/extinguished.
- If a leakage of refrigerant is found which requires brazing, all of the refrigerant shall be recovered from the system, or isolated (by means of shut off valves) in a part of the system remote from the leak.• When removing refrigerant from a system, either for servicing or decommissioning, it is recommended good practice that all refrigerants are removed safely.
- When transferring refrigerant into cylinders, ensure that only appropriate refrigerant recovery cylinders are employed. Ensure that the correct number of cylinders for holding the total system charge is available. All cylinders to be used are designated for the recovered refrigerant and labeled for that refrigerant (i.e., special cylinders for the recovery of refrigerant). Cylinders shall be complete with pressure-relief valve and associated shut-off valves in good working order. Empty recovery cylinders are evacuated and, if possible, cooled before recovery occurs.
- The recovery equipment shall be in good working order with a set of instructions concerning the equipment that is at hand and shall be suitable for the recovery of all appropriate refrigerants including, when applicable, flammable refrigerants. In addition, a set of calibrated weighing scales shall be available and in good working order. Hoses shall be complete with leak-free disconnect couplings and in good condition. Before using the recovery machine, check that it is in satisfactory working order, has been properly maintained and that any associated electrical components are sealed to prevent ignition in the event of a refrigerant release. Consult manufacturer if in doubt.
- The recovered refrigerant shall be returned to the refrigerant supplier in the correct recovery cylinder, and the relevant waste transfer note arranged. Do not mix refrigerants in recovery units and especially not in cylinders.
- If compressors or compressor oils are to be removed, ensure that they have been evacuated to an acceptable level to make certain that flammable refrigerant does not remain within the lubricant. The evacuation process shall be carried out prior to returning the compressor to the suppliers. Only electric heating to the compressor body shall be employed to accelerate this process. When oil is drained from a system, it shall be carried out safely.
- In addition to conventional charging procedures, the following requirements shall be followed:
  - Ensure that contamination of different refrigerants does not occur when using charging equipment. Hoses or lines shall be as short as possible to minimize the amount of refrigerant contained in them.
  - Cylinders shall be kept in an appropriate position according to the instructions.
  - Ensure that the refrigerating system is earthed (grounded) prior to charging the system with refrigerant.
  - Label the system when charging is complete (if not already).
  - Extreme care shall be taken not to overfill the refrigerating system.
- Prior to recharging the system, it shall be pressure-tested with the appropriate purging gas. The system shall be leak-tested on completion of charging but prior to commissioning. A follow up leak test shall be carried out prior to leaving the site.

⚠ DANGER continued

- Repair and maintenance to electrical components shall include initial safety checks and component inspection procedures. If a fault exists that could compromise safety, then no electrical supply shall be connected to the circuit until it is satisfactorily dealt with. If the fault cannot be corrected immediately but it is necessary to continue operation, an adequate temporary solution shall be used. This shall be reported to the owner of the equipment, so all parties are advised.
- Confirm that capacitors are discharged: this shall be done in a safe manner to avoid possibility of sparking.
- Confirm that no live electrical components and wiring are exposed while charging, recovering, or purging the system.
- Confirm that there is continuity of earth bonding (grounding).
- During repairs to sealed components, all electrical supplies shall be disconnected from the equipment being worked upon prior to any removal of sealed covers, etc. If it is absolutely necessary to have an electrical supply to equipment during servicing, then a permanently operating form of leak detection shall be located at the most critical point to warn of a potentially hazardous situation.
- Where electrical components are being changed, they shall be fit for the purpose and to the correct specification. At all times, Hoshizaki America's maintenance and service guidelines shall be followed. If in doubt, consult Hoshizaki America's Technical Support department for assistance.
- Confirm the actual refrigerant charge is in accordance with the room size within which the refrigerant containing parts are installed.
- Confirm the ventilation machinery and outlets are operating adequately and are not obstructed.
- Confirm marking to the equipment continues to be visible and legible. Markings and signs that are illegible shall be corrected.
- Confirm refrigerating pipe or components are installed in a position where they are unlikely to be exposed to any substance which may corrode refrigerant containing components, unless the components are constructed of materials which are inherently resistant to being corroded or are suitably protected against being so corroded.
- Particular attention shall be paid to the following to ensure that by working on electrical components, the casing is not altered in such a way that the level of protection is affected. This shall include damage to cables, excessive number of connections, terminals not made to original specification, damage to seals, incorrect fitting of glands, etc.
- Ensure that the apparatus (control box/component) is mounted securely.
- Ensure that seals or sealing materials have not degraded to the point that they no longer serve the purpose of preventing the ingress of flammable atmospheres. Replacement parts shall be in accordance with Hoshizaki America’s specifications.
- Do not apply any permanent inductive or capacitance loads to the circuit without ensuring that this will not exceed the permissible voltage and current permitted for the equipment in use.

⚠ DANGER continued

- Intrinsically safe components are the only types that can be worked on while live in the presence of a flammable atmosphere. The test apparatus shall be at the correct rating.
- Replace components only with parts specified by Hoshizaki America. Other parts can result in the ignition of refrigerant in the atmosphere from a leak.
- Check that cabling will not be subject to wear, corrosion, excessive pressure, vibration, sharp edges, or any other adverse environmental effects. The check shall also take into account the effects of aging or continual vibration from sources such as compressors or fans.

R-290 Classe A3 Réfrigérant Inflammable Utilisé

⚠ DANGER

Risque De Feu Ou D'Explosion. Fluide Frigorigène Inflammable Utilisé.

- Assurez-vous de suivre toutes les informations importantes de sécurité situées au début de ce manuel et dans cette section.
- L'appareil ne doit être diagnostiqué et réparé que par un personnel qualifié afin de prévenir les risques de mort, d'électrocution, de blessures graves ou d'incendie.
- L'entretien doit être effectué par du personnel formé et certifié pour la manipulation de réfrigérants inflammables afin de réduire au minimum le risque d'inflammation dû à des pièces incorrectes ou à un entretien inadéquat.
- Suivez attentivement les instructions de manutention conformément aux réglements nationaux.
- Ne pas utiliser de dispositifs mécaniques ou d'autres moyens pour accélérer le processus de dégivrage ou pour nettoyer, autres que ceux recommandés par le fabricant.
- Attention, les fluides frigorigénes peuvent ne pas dégager d'odeur.
- Ne pas perforer la tubulure contenant le frigorigène. Risque de feu ou d'explosion si la tubulure contenant le frigorigène est perforée; suivre les instructions de manutention avec soin.
- Les pièces doivent être remplacées par des pièces similaires, de manière à réduire au minimum le risque d'inflammation dû à des pièces incorrectes.
- Ne placez aucune source d'inflammation potentielle dans ou près de l'appareil.
- Avant de commencer à travailler sur des systèmes contenant des réfrigérants inflammables, des contrôles de sécurité sont nécessaires pour s'assurer que le risque d'inflammation est minimisé.
- Tout le personnel d'entretien et les autres personnes travaillant dans la zone locale doivent être informés de la nature des travaux effectués. Les travaux dans des espaces confinés doivent être évités.
- Les travaux doivent être entrepris selon une procédure contrôlée afin de minimiser le risque de présence de gaz ou de vapeur inflammable pendant l'exécution des travaux.
- La zone doit être contrôlée à l'aide d'un détecteur de réfrigérant approprié avant et pendant les travaux, afin de s'assurer que le technicien est conscient de l'existence d'atmosphères potentiellement toxiques ou inflammables.
- Assurez-vous que l'équipement de détection des fuites utilisé est adapté à l'utilisation de tous les réfrigérants applicables, c'est-à-dire qu'il ne produit pas d'étincelles, qu'il est correctement scellé ou qu'il est intrinsèquement sûr. REMARQUE: L'utilisation de mastic silicone peut réduire l'efficacité de certains types d'équipements de détection des fuites.
- En aucun cas, des sources potentielles d'inflammation ne doivent être utilisées pour rechercher ou détecter des fuites de réfrigérant. Une lampe haloïde (ou tout autre détecteur utilisant une flamme nue) ne doit pas être utilisée.

⚠ DANGER Continué

- Les méthodes de détection de fuite suivantes sont considérées comme acceptables pour tous les systèmes de réfrigération:
  - Des détecteurs de fuites électroniques peuvent être utilisés pour détecter les fuites de réfrigérants, mais, dans le cas de réfrigérants inflammables, la sensibilité pourrait ne pas être adéquate ou nécessiter un réétalonnage. (L'équipement de détection doit être étalonné dans une zone sans réfrigérant.) Assurez-vous que le détecteur n'est pas une source potentielle d'inflammation et qu'il est adapté au réfrigérant utilisé. L'équipement de détection des fuites doit être réglé sur un pourcentage de la LII du réfrigérant et doit être étalonné en fonction du réfrigérant utilisé, et le pourcentage approprié de gaz (25% au maximum) est confirmé.
  - Les liquides de détection des fuites conviennent également à la plupart des réfrigérants, mais l'utilisation de détergents contenant du chlore doit être évitée, car le chlore peut réagir avec le réfrigérant et corroder la tuyauterie en cuivre.

    Remarque : Voici quelques exemples de liquides de détection de fuites :
    - méthode des bulles
    - agents de méthode fluorescents
- Si un travail à chaud doit être effectué sur l'équipement réfrigérant ou toute partie associée, un équipement d'extinction d'incendie approprié doit être disponible. Un extincteur à poudre chimique ou à CO_2 devrait être installé à proximité de la zone de chargement. Un extincteur chimique de classe B doit être disponible à tout moment.
- Il est interdit à toute personne effectuant des travaux en rapport avec un système réfrigérant qui impliquent la mise à nu d'une tuyauterie d'utiliser des sources d'inflammation de manière à entraîner un risque d'incendie ou d'explosion. Toutes les sources d'inflammation possibles, y compris la cigarette, doivent être suffisamment éloignées du site d'installation, de réparation, d'enlèvement et d'élimination, au cours desquels du réfrigérant peut éventuellement être libéré dans l'espace environnant. Avant d'entamer les travaux, la zone autour de l'équipement doit être étudiée pour s'assurer qu'il n'y a aucun risque d'inflammabilité ou d'inflammation. Des panneaux « Interdiction de fumer » doivent être affichés.
- Assurez-vous que la zone est à l'air libre ou qu'elle est correctement ventilée avant de pénétrer dans le système ou d'effectuer un travail à chaud. Un certain degré de ventilation doit être maintenu pendant la période où les travaux sont effectués. La ventilation doit permettre de disperser en toute sécurité tout réfrigérant libéré et, de préférence, de l'expulser dans l'atmosphère.

⚠ DANGER Continué

- Pour pénétrer dans le circuit du réfrigérant afin d'effectuer des réparations ou pour toute autre raison, des procédures conventionnelles doivent être utilisées. Toutefois, pour les réfrigérants inflammables, il est important de suivre les meilleures pratiques, car l'inflammabilité est un facteur à prendre en considération. La procédure suivante doit être respectée:
  - éliminer le réfrigérant en toute sécurité conformément aux réglementations locales et nationales
  - purger le circuit avec du gaz inerte
  - évacuer (en option pour A2L)
  - purger avec du gaz inerte (en option pour A2L)
  - ouvrir le circuit par coupure
- Si une fuite est suspectée, toutes les flammes nues doivent être enlevées/éteintes.
- Si une fuite de réfrigérant nécessitant un brasage est constatée, tout le réfrigérant doit être récupéré dans le système ou isolé (au moyen de vannes d'arrêt) dans une partie du système éloignée de la fuite.
- Lors de l'élimination du réfrigérant d'un système, que ce soit pour l'entretien ou la mise hors service, il est recommandé de veiller à ce que tous les réfrigérants soient éliminés en toute sécurité.
- Lors du transfert de réfrigérant dans des bouteilles, veillez à ce que seules des bouteilles de récupération de réfrigérant appropriées soient utilisées. Assurez-vous que le nombre de bouteilles nécessaires pour contenir la charge totale du système est disponible. Toutes les bouteilles à utiliser sont désignées pour le réfrigérant récupéré et étiquetées pour ce réfrigérant (c'est-à-dire des bouteilles spéciales pour la récupération du réfrigérant). Les bouteilles doivent être équipées d'une soupape de surpression et de soupapes d'arrêt associées qui sont en bon état de fonctionnement. Les bouteilles de récupération vides sont évacuées et, si possible, refroidies avant la récupération.
- L'équipement de récupération doit être en bon état de fonctionnement, accompagné d'un ensemble d'instructions concernant l'équipement disponible et doit être adapté à la récupération de tous les réfrigérants appropriés, y compris, le cas échéant, les réfrigérants inflammables. En outre, un ensemble de balances étalonnées doit être disponible et en bon état de fonctionnement. Les tuyaux doivent être complets, équipés de raccords de déconnexion sans fuite et en bon état. Avant d'utiliser la machine de récupération, vérifiez qu'elle est en bon état de fonctionnement, qu'elle a été correctement entretenue et que tous les composants électriques associés sont scellés pour éviter toute inflammation en cas de fuite de réfrigérant. Consulter le fabricant en cas de doute.
- Le réfrigérant récupéré doit être renvoyé au fournisseur de réfrigérant dans la bouteille de récupération appropriée et le bon de transfert de déchets correspondant doit être établi. Ne mélangez pas les réfrigérants dans les unités de récupération et surtout pas dans les bouteilles.

⚠ DANGER Continué

- Si les compresseurs ou les huiles de compresseur doivent être retirés, assurez-vous qu'ils ont été évacués à un niveau acceptable afin de s'assurer qu'il ne reste pas de réfrigérant inflammable dans le lubrifiant. Le processus d'évacuation doit être effectué avant que le compresseur ne soit renvoyé aux fournisseurs. Seul le chauffage électrique du boîtier du compresseur doit être utilisé pour accélérer ce processus. Lorsque l'huile est vidangée d'un système, cette opération doit être effectuée en toute sécurité.• En plus des procédures de charge conventionnelles, les exigences suivantes doivent être respectées :
  - S'assurer qu'aucune contamination de différents réfrigérants ne se produit lors de l'utilisation de l'équipement de charge. Les tuyaux ou conduites doivent être aussi courts que possible afin de minimiser la quantité de réfrigérant qu'ils contiennent.
  - Les bouteilles doivent être maintenues dans une position appropriée conformément aux instructions.
  - S'assurer que le système de réfrigération soit mis à la terre avant de charger le système avec du réfrigérant.
  - Étiqueter le système lorsque la charge est terminée (si cela n'a pas déjà été fait).
  - Il faut veiller à ne pas trop remplir le système de réfrigération.
- Avant de recharger le système, celui-ci doit être testé sous pression avec le gaz de purge approprié. Le système doit être soumis à un essai de fuite à la fin de la charge, mais avant la mise en service. Un test de contrôle de fuite doit être effectué avant de quitter le site.
- La réparation et l'entretien des composants électriques incluent les contrôles de sécurité initiaux et les procédures d'inspection des composants. En cas de défaut susceptible de compromettre la sécurité, aucune alimentation électrique ne doit être connectée au circuit tant que le problème n'a pas été résolu de manière satisfaisante. Si le défaut ne peut être corrigé immédiatement mais qu'il est nécessaire de poursuivre l'exploitation, une solution temporaire adéquate doit être utilisée. Cela doit être signalé au propriétaire de l'équipement, afin que toutes les parties soient informées.
- S'assurer que les condensateurs sont déchargés : cette opération doit être effectuée en toute sécurité afin d'éviter tout risque d'étincelle.
- S'assurer qu'aucun composant ou câblage électrique sous tension n'est exposé lors de la charge, de la récupération ou de la purge du système.
- S'assurer de la continuité de la mise à la terre.
- Lors des réparations de composants scellés, toutes les alimentations électriques doivent être déconnectées de l'équipement sur lequel on travaille avant tout retrait des couvercles scellés, etc. Si l'alimentation électrique de l'équipement est absolument nécessaire pendant l'entretien, un dispositif de détection des fuites fonctionnant en permanence doit être placé au point le plus critique afin de signaler en cas de situation potentiellement dangereuse.
- Lorsque des composants électriques sont remplacés, ils doivent être adaptés à l'usage prévu et répondre aux spécifications correctes. Les directives de maintenance et d'entretien de Hoshizaki America doivent être respectées à tout moment. En cas de doute, consulter le service d'assistance technique de Hoshizaki America pour obtenir de l'aide.

⚠ DANGER Continué

- S'assurer que la charge réelle de réfrigérant est conforme à la taille de la pièce dans laquelle les pièces contenant du réfrigérant sont installées.
- S'assurer que les dispositifs et les sorties de ventilation fonctionnent correctement et ne sont pas obstrués.
- S'assurer que le marquage de l'équipement est toujours visible et lisible. Les indications et les panneaux illisibles doivent être corrigés.
- S'assurer que les tuyaux ou les composants de réfrigération sont installés dans un endroit où ils ne risquent pas d'être exposés à une substance susceptible de corroder les composants contenant du réfrigérant, à moins que les composants ne soient construits avec des matériaux intrinsèquement résistants à la corrosion ou qu'ils ne soient protégés de manière appropriée contre la corrosion.
- Une attention particulière doit être accordée aux points suivants afin de s'assurer qu'en travaillant sur les composants électriques, le boîtier n'est pas altéré de manière à ce que le niveau de protection soit affecté. Il s'agit notamment des dommages causés aux câbles, du nombre excessif de connexions, des terminaux non conformes aux spécifications d'origine, des dommages causés aux joints et du montage incorrect des presse-étoupes, etc.
- S'assurer que l'appareil (boîtier de commande/composant) est solidement fixé.
- S'assurer que les joints ou les matériaux d'étanchéité ne sont pas dégradés au point de ne plus pouvoir empêcher la pénétration d'atmosphères inflammables. Les pièces de rechange doivent être conformes aux spécifications de Hoshizaki America.
- N'appliquez aucune charge inductive ou capacitive permanente au circuit sans vous assurer que celle-ci ne dépassera pas la tension et le courant autorisés pour l'équipement utilisé.
- Les composants à sécurité intrinsèque sont les seuls types de composants sur lesquels il est possible de travailler sous tension en présence d'une atmosphère inflammable. L'appareil d'essai doit être adapté à la puissance requise.
- Ne remplacer les composants que par des pièces spécifiées par Hoshizaki America. D'autres pièces peuvent entraîner l'inflammation du réfrigérant dans l'atmosphère à la suite d'une fuite.
- Vérifier que le câblage ne sera pas soumis à l'usure, à la corrosion, à une pression excessive, à des vibrations, à des arêtes vives ou à tout autre effet environnemental négatif. Le contrôle doit également prendre en compte les effets du vieillissement ou des vibrations continues provenant de sources telles que les compresseurs ou les ventilateurs.

B. Service Diagnosis

R-290 Class A3 Flammable Refrigerant Used

⚠ DANGER

Risk of Fire or Explosion. Flammable Refrigerant Used.

- Be sure to follow all Important Safety Information located at the beginning of this manual and at the beginning of section "III.A. Safety Precautions When Servicing."
- Servicing shall be done by trained service personnel with certified competence in handling flammable refrigerants to minimize the risk of possible ignition due to incorrect parts or improper service.

Risque De Feu Ou D'Explosion. Fluide Frigorigène Inflammable Utilisé.

- Assurez-vous de suivre toutes les informations importantes de sécurité qui se trouvent au début du présent manuel et au début de la section «III.A. Précautions de sécurité lors de l'entretien.»
- L'entretien doit être effectué par du personnel formé et certifié pour la manipulation de réfrigérants inflammables afin de réduire au minimum le risque d'inflammation dû à des pièces incorrectes ou à un entretien inadéquat.

⚠ WARNING

- Risk of electric shock. Use extreme caution and exercise safe electrical practices.
- Risk of electric shock. Control switch in "OFF" position does not de-energize all loads (optional drain pump).
- Move the control switch to the "OFF" position, then unplug the appliance from the electrical outlet before servicing.
- Moving parts (e.g., fan blade) can crush and cut. Keep hands clear.
- **CHOKING HAZARD:** Ensure all components, fasteners, and thumbscrews are securely in place after the appliance is serviced. Make sure that none have fallen into the ice storage bin.
- Make sure all food zones in the appliance are clean after service.

1. Diagnostic Procedure

a) Ice Production Check

To check production, prepare a bucket or pan to catch the ice and a set of scales to weigh the ice. After the appliance has operated for 10 to 20 minutes, catch the ice production for 10 minutes. Weigh the ice to establish the batch weight. Multiply the batch weight by 144 for the total production in 24 hours. When confirming production or diagnosing low production, see "VII.A. Specification and Performance Data" for typical production information.

b) Operation Diagnosis Preparation

This diagnostic procedure is a sequence check that allows you to diagnose the electrical system and components. Before proceeding, check for correct installation, proper voltage per appliance nameplate, and adequate water supply.

Note:
- When checking high voltage (115VAC), always choose a white (W) neutral wire to establish a good neutral connection.
- Time Delay Relay: 90 sec. low water safety circuit. Controlled by LFS, UFS, and water control relay.
- Optional drain pump (HS-5061) has 115VAC power supply as soon as the appliance is plugged into the electrical outlet.

1) Access the control box and move the control switch to the "OFF" position.
2) Unplug the appliance from the electrical outlet.
3) Clear any ice from the bin control thermistor.
4) Remove the front panel, louver, and upper and lower rear panels.
5) Remove the screws securing the control box, then gently pull out the control box and secure it in a safe position. Remove the control box cover.
6) Plug the appliance back into the electrical outlet.
7) Move the control switch to the "DRAIN" position. DV energizes.
   DV Diagnosis: If DV does not energize, check if optional drain pump HS-5061 is installed. If installed, confirm the water level in the drain pump reservoir is not high enough to close the drain pump safety switch. When the water level lowers enough to open the drain pump upper float switch, power is restored to the icemaker. The pump motor remains energized as long as the drain pump lower float switch is closed.
   If optional drain pump is installed, see "IV.B. Optional Drain Pump HS-5061."
   If the optional drain pump is not installed, check that the drain pump jumper connection is in place. Next, check for 115VAC at control switch terminal #3 (W/DBU) to neutral (W). If 115VAC is not present, check control switch continuity, optional drain pump jumper and power supply. If 115VAC is present, check DV coil continuity. Replace as needed.
8) Once all of the water has drained, move the control switch to the "OFF" position.

c) Operation Diagnosis

9) **Power On Diagnosis - Startup/Fill Cycle:**
Control Switch: Move the control switch to the "ICE" position. With LFS and UFS open, WV energizes. If not, check for 115VAC at control switch #2 (BR) to neutral (W) then at control switch #1 (BK) to neutral (W). If 115VAC is present at #2 (BR) to neutral (W) and not at #1 (BK) to neutral (W), replace control switch.
Bin Control Thermistor and Thermistor Control Board: If 115VAC is present at control switch #1 (BK) to neutral (W) and THCB green "POWER" LED 1 is not on, check THCB K1-3 (BK) to K1-2 (W). If 115VAC is present and THCB green "POWER" LED 1 is not on, replace THCB. If THCB green "POWER" LED 1 is on and THCB LED 2 is not on, remove BCTH wires from THCB K2 connectors and check BCTH continuity. See "III.B.2. Bin Control Thermistor Check." Replace as needed. If BCTH is good, reconnect BCTH wires to THCB K2. Next, check THCB X1 (BK) to neutral (W) for 115VAC.
If 115VAC is present and LED 2 is off, replace THCB. If 115VAC is present at THCB X1 (BK) and not at THCB X1 (BR) and LED 2 is on, replace THCB.
Fill Cycle: If THCB LED 2 is on and the reservoir does not start filling, check the water supply line shut-off valve, water filters, and WV screen. Next, if WV does not energize, check for 115VAC at WV. If 115VAC is not present at WV, check for 115VAC at WCR #8 (BK) to WCR #7 (W). If 115VAC is present, confirm that UFS is open. See "III.B.3. Float Switch Check." If 115VAC is not present and WV is not energized, check WCR #2 (O) to neutral (W) and WCR #6 (BR) to neutral (W). If 115VAC is not present at WCR #6 (BR) to neutral (W), check control switch position and wire connections to WCR. If 115VAC is present at WCR #6 (BR) to neutral (W) and not present at WCR #2 (O) to neutral (W), replace WCR. If 115VAC is present at WCR #2 (O) to neutral (W), check WV solenoid continuity. If open, replace WV.
Fill Cycle Complete: Reservoir fills, LFS closes. Nothing happens at this time. Reservoir continues to fill until UFS closes. Check that UFS closes when reservoir is full. If not, check FS. See "III.B.3. Float Switch Check and Cleaning."

10) **Freeze Cycle**–UFS closes and energizes WCR. WV de-energizes, TDR then energizes GM, FM, and CR. CR then energizes Comp. Ice production starts 4 to 6 minutes after Comp energizes depending on ambient and water conditions.
WCR Diagnosis: Confirm WCR energizes. If not, confirm UFS is closed.
See "III.B.3. Float Switch Check and Cleaning." With UFS closed, check for 115VAC at WCR #8 (BK) to WCR #7 (W). If 115VAC is not present, check control switch position and continuity. Also check wire connections to FS and WCR. If 115VAC is present, check that WV de-energized. If not, check for 0VAC at WCR #2 (O) to neutral (W).
If 115VAC is present, replace WCR. Next, check for 115VAC at WCR #5 (BR) to neutral (W) and WCR #3 (P) to neutral (W). If 115VAC is not present at WCR #5 (BR) to neutral (W), check control switch position and wire connections to WCR. If 115VAC is present at WCR #5 (BR) to neutral (W) and not at WCR #3 (P) to neutral (W), WCR is not energized or contacts are sticking. Replace WCR. If 115VAC is present at WCR #3 (P) to neutral (W), WCR is good and TDR energizes.

TDR Diagnosis: Confirm 115VAC at TDR #2 (BR) and TDR #5 (P) to TDR #3 neutral (W). If 115VAC is present at TDR #2 (BR) and not at TDR #5 (P), see WCR Diagnosis above. If 115VAC is present at TDR #2 (BR) and TDR #5 (P) to TDR #3 neutral (W) and GM does not start, confirm 115VAC at TDR #8 (BR) to neutral. Next, check for 115VAC at TDR #9 (W/R) to neutral (W). If 115VAC is present at TDR #8 (BR) and not at TDR #9 (W/R), replace TDR.

GM Diagnosis: Check that GM energizes. If not, check for 115VAC at GM. If 115VAC is not present, check GM external protector on front of control box. If tripped, reset. If it does not reset, replace GM external protector. Once reset, GM energizes, if not, check GM windings (internal protector) and GM capacitor. If GM starts but the auger does not turn, check coupling between auger and GM.

FM Diagnosis: Check that FM energizes. If not, check for 115VAC at FM. If 115VAC is not present, check wiring connections from GM. If 115VAC is present and FM is not energized, check FM windings and fan blade for binding.

CR/Comp Diagnosis: Check for 115VAC at CR #8 (R) to neutral (W). If 115VAC is not present, check wiring connections from GM. If 115VAC is present, confirm 115VAC at CR #3 (BR). If 115VAC is present check for 115VAC at CR #5 (R) to neutral (W). If 115VAC is present on CR #3 (BR) and not at CR #5 (R), replace CR. If 115VAC is present at CR #5 (R), check Comp PTC and Comp winding.

11) **Refill/Low Water Safety**–As ice is produced, the water level in the reservoir drops. UFS opens, nothing happens at this time. LFS opens and refill begins, WCR de-energizes, TDR de-energizes, FT (90 sec.) starts, WV energizes. Comp, FM, and GM continue. LFS closes, nothing happens at this time. UFS closes, WCR energizes, TDR energizes, and FT resets. WV de-energizes. If FT terminates before UFS closes, Comp, CR, FM, and GM de-energize and WV remains energized until UFS closes.

Refill Diagnosis: Check that WCR de-energizes. If not, see "III.B.3. Float Switch Check and Cleaning." Once WCR de-energizes, confirm WV energizes. If not, check for 115VAC at WCR #2 (O) to neutral (W). If 115VAC is not present, replace WCR. If 115VAC is present, check WV solenoid continuity. Replace as needed. Confirm UFS closes and WCR energizes within 90 sec. of WV energizing. If not, confirm that water supply is on. Once UFS closes, WCR energizes, energizing TDR and resetting FT. If FT is exceeded, Comp, FM, and GM de-energize. Check that TDR energizes after WCR energizes. Check for 115VAC at TDR #5 (P) to neutral (W). If 115VAC is not present at TDR #5 (P) to neutral (W), confirm WCR status. If 115VAC is present at TDR #5 (P) to neutral (W), and Comp, CR, FM, and GM de-energized, replace TDR.

FT Diagnosis (90 sec. low water safety): If UFS does not close within 90 sec. of LFS opening, FT terminates and TDR de-energizes GM, FM, CR, and Comp. Components remain off until UFS closes. If components continue longer than 90 sec. with UFS open, replace TDR. If GM and FM de-energize but Comp continues, check CR contacts for sticking. Replace as needed.

12) **Shutdown (Bin Control Thermistor)**–When the appliance is running, hold ice in contact with the thermistor. THCB X1 relay switch opens within 30 to 60 sec., shutting down the appliance. No adjustment available. If THCB X1 relay switch does not shutdown icemaker, check BCTH KΩ reading. See "III.B.2. Bin Control Thermistor Check." If bin control thermistor is good and icemaker does not shutdown, replace THCB.

Legend: **BCTH**–bin control thermistor; **Comp**–compressor; **CR**–compressor relay; **FM**–fan motor; **FS**–float switch; **FT**–fill timer; **GM**–gear motor; **LFS**–lower float switch; **PTC**–start relay; **ST**–shutdown timer; **THCB**–thermistor control board; **TDR**–time delay relay; **UFS**–upper float switch; **WCR**–water control relay; **WV**–inlet water valve

2. Bin Control Thermistor Check

To check the bin control thermistor, follow the steps below.

NOTICE
When the ambient temperature is below 45°F (7°C), the bin control thermistor shuts down the appliance even if the ice storage bin is empty.

1) Move the control switch to the "OFF" position.
2) Unplug the appliance.
3) Remove the front panel and control box cover. Loosen the control box from the base and slide it out for easy access. Next, clear any ice away from BCTH.
4) Remove the bin control thermistor from mounting bracket.
5) Immerse the thermistor in a glass containing ice and water for 2 or 3 min.
6) Disconnect the BCTH connector from the THCB and check the resistance between the thermistor leads. Normal range is *26.1 to 28.4 kΩ. If outside the normal range, replace BCTH. If within the normal range, continue to the next step.
7) Replace the BCTH in its correct position.
8) Reconnect the BCTH connector to the THCB.
9) Replace the control box and control box cover in their correct positions.
10) Replace the front panel in its correct position.
11) Move the control switch to the "ICE" position.
12) Turn on the power supply.

Legend: **BCTH–**bin control thermistor;
THCB–thermistor control board

TABLE 3 (ET-10K-1%-BETA 3435)					
°C	R/T	°C	R/T	°C	R/T
-16	55950	20	12090	56	3426
-15	53390	21	11630	57	3319
-14	50960	22	11200	58	3216
-13	48660	23	10780	59	3116
-12	46480	24	10380	60	3021
-11	44410	25	10000	61	2928
-10	42450	26	9632	62	2838
-9	40560	27	9281	63	2752
-8	38760	28	8944	64	2669
-7	37050	29	8622	65	2589
-6	35430	30	8313	66	2512
-5	33890	31	8015	67	2437
-4	32430	32	7729	68	2365
-3	31040	33	7455	69	2296
-2	29720	34	7192	70	2229
* -1	28470	35	6941	71	2163
0	27280	36	6699	72	2100
1	26130	37	6468	73	2039
2	25030	38	6246	74	1980
3	23990	39	6033	75	1924
4	22990	40	5828	76	1869
5	22050	41	5630	77	1816
6	21150	42	5439	78	1765
7	20290	43	5256	79	1716
8	19480	44	5080	80	1668
9	18700	45	4912	81	1621
10	17960	46	4749	82	1577
11	17240	47	4594	83	1533
12	16550	48	4444	84	1491
13	15900	49	4300	85	1451
14	15280	50	4161	86	1411
15	14680	51	4026	87	1373
16	14120	52	3897	88	1336
17	13570	53	3772	89	1300
18	13060	54	3652	90	1266
19	12560	55	3537	95	1108

3. Float Switch Check and Cleaning

a) Float Switch Check

1) Move the control switch to the "DRAIN" position.
2) Remove the rear cover.
3) Allow the water system to drain for 1 min.
4) Move the control switch to the "OFF" position, then unplug the appliance from the electrical outlet.
5) Remove bell connectors from FS black (BK), blue (BU), and red (R) wires.
   Check continuity between black (BK) (common) and red (R) (UFS) and between black (BK) (common) and blue (BU) (LFS). If both are open, continue to step 6. If either are closed, follow the steps in "III.B.3.b) Float Switch Cleaning." After cleaning FS, check UFS and LFS again. Replace if necessary.
6) Cap the FS appliance wires. Black (BK), red (R), and blue (BU).
7) Plug the appliance into the electrical outlet, then move the control switch to the "ICE" position.
8) Once the reservoir overflows, move the control switch to the "OFF" position, then unplug the appliance from the electrical outlet.
9) Check continuity between black (BK) (common) and red (R) (UFS), and between black (BK) (common) and blue (BU) (LFS). If either are open, follow the steps in "II.D.2. Float Switch Cleaning." After cleaning FS, check UFS and LFS again. Replace if necessary.
10) Reconnect FS wires to the appropriate appliance wires. Black (BK) to black (BK), red (R) to brown or red (BR or R), and blue (BU) to blue (BU).
11) Replace rear cover in its correct position.
12) Plug the appliance into the electrical outlet, then move the control switch to the "ICE" position to start the automatic icemaking process.

Legend: **FS**–float switch; **LFS**–lower float switch; **UFS**–upper float switch

b) Float Switch Cleaning

Depending on local water conditions, scale may build up on FS. Scale on FS can cause inconsistent operation of UFS and LFS. In this case, FS should be cleaned and checked.

1) Move the control switch to the "OFF" position, then unplug the appliance from the electrical outlet.
2) Remove the rear cover.
3) Remove FS assembly from the reservoir cover. See Fig. 1.
4) Wipe down FS assembly with a mixture of 1 part Hoshizaki "Scale Away" and 25 parts warm water. Rinse the assembly thoroughly with clean water.
5) While not necessary, the floats can be removed from the shaft during cleaning. If you remove them, note that the blue float is on top (UFS) and the white float is on bottom (LFS). See Fig. 2. The floats must be installed with the magnets inside them towards the top of the switch. Installing the floats upside down will affect the timing of FS operation.
6) Rinse FS assembly thoroughly with clean water and replace in its correct position.
7) Replace the rear cover in its correct position.
8) Plug the appliance into the electrical outlet, then move the control switch to the "ICE" position to start the automatic icemaking process.

Legend: **FS**–float switch; **LFS**–lower float switch; **UFS**–upper float switch

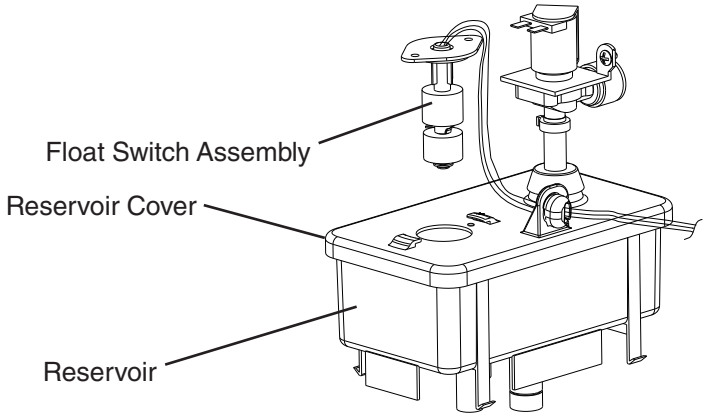

Fig. 1

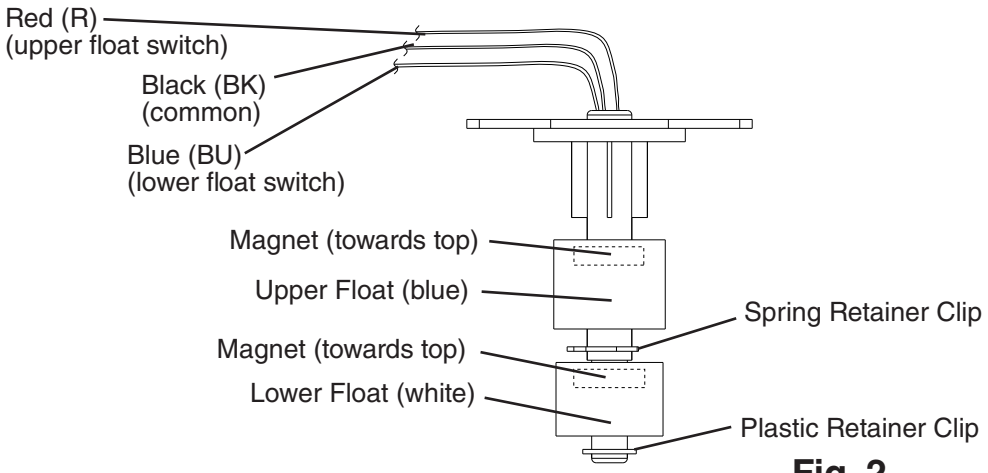

Fig. 2

4. Diagnostic Tables

a) No Ice Production

No Ice Production - Possible Cause	
Startup/Fill Cycle	
1. Power Supply	a) Unplugged, off, blown fuse, or tripped breaker.
	b) Not within specifications.
2. Water Supply	a) Water supply off or improper water pressure.
	b) External water filters clogged.
3. Optional Drain Pump (HS-5061)	a) Safety switch open.
	b) Connector loose or disconnected.
	c) Clogged or kinked hose.
	d) Defective.
4. Control Switch	a) "OFF" position.
	b) Bad contacts.
5. Bin Control Thermistor See "III.B.2. Bin Control Thermistor Check"	a) Ambient temperature too cool.
	b) Thermistor out of bracket.
	c) Defective.
6. Thermistor Control Board	a) Defective.
7. Water Control Relay	a) Energized and not allowing water valve to energize. See "II.D.1. Float Switch Check."
	b) Defective.
8. Inlet Water Valve	a) Screen or orifice clogged.
	b) Defective.
9. Float Switch See "III.B.3. Float Switch Check and Cleaning."	a) Float does not move freely.
	b) Defective.
Freeze Cycle	
1. Water Control Relay	a) Defective.
2. Time Delay Relay	a) Defective.
3. Gear Motor	a) Gear motor external protector (2.4~3.0A) tripped.
	b) Gear motor internal protector open or windings open.
	c) Bad gear motor capacitor.
	d) Locked bearings.
	e) Spline coupling or gear broken and auger not turning.
4. Fan Motor	a) Fan blade does not move freely.
	b) Defective.
5. Compressor Relay	a) Defective.
6. Compressor	a) PTC relay defective
	b) Inefficient.
	c) Defective.
7. Evaporator	a) Dirty.
	b) Damaged or defective.

8. Condenser	a) Dirty.
9. Refrigerant	a) Low charge or overcharged.
	b) Refrigerant lines or components restricted.
10. Water System	a) Water leaks.
Refill	
1. Float Switch See "III.B.3. Float Switch Check and Cleaning."	a) Dirty/sticking.
	b) Defective.
2. Inlet Water Valve	a) Screen or orifice clogged.
	b) Defective.
3. Water Supply	a) Water supply off or improper water pressure (7 to 113 PSIG).
	b) External water filters clogged.
4. Water Control Relay	a) Defective.
5. Time Delay Relay	a) Defective.
Bin Control Thermistor	
1. Bin Control Thermistor See "III.B.2. Bin Control Thermistor Check"	a) Defective.
2. Thermistor Control Board	a) Defective.

5. Thermistor Control Board and Thermistor Control Board Layout

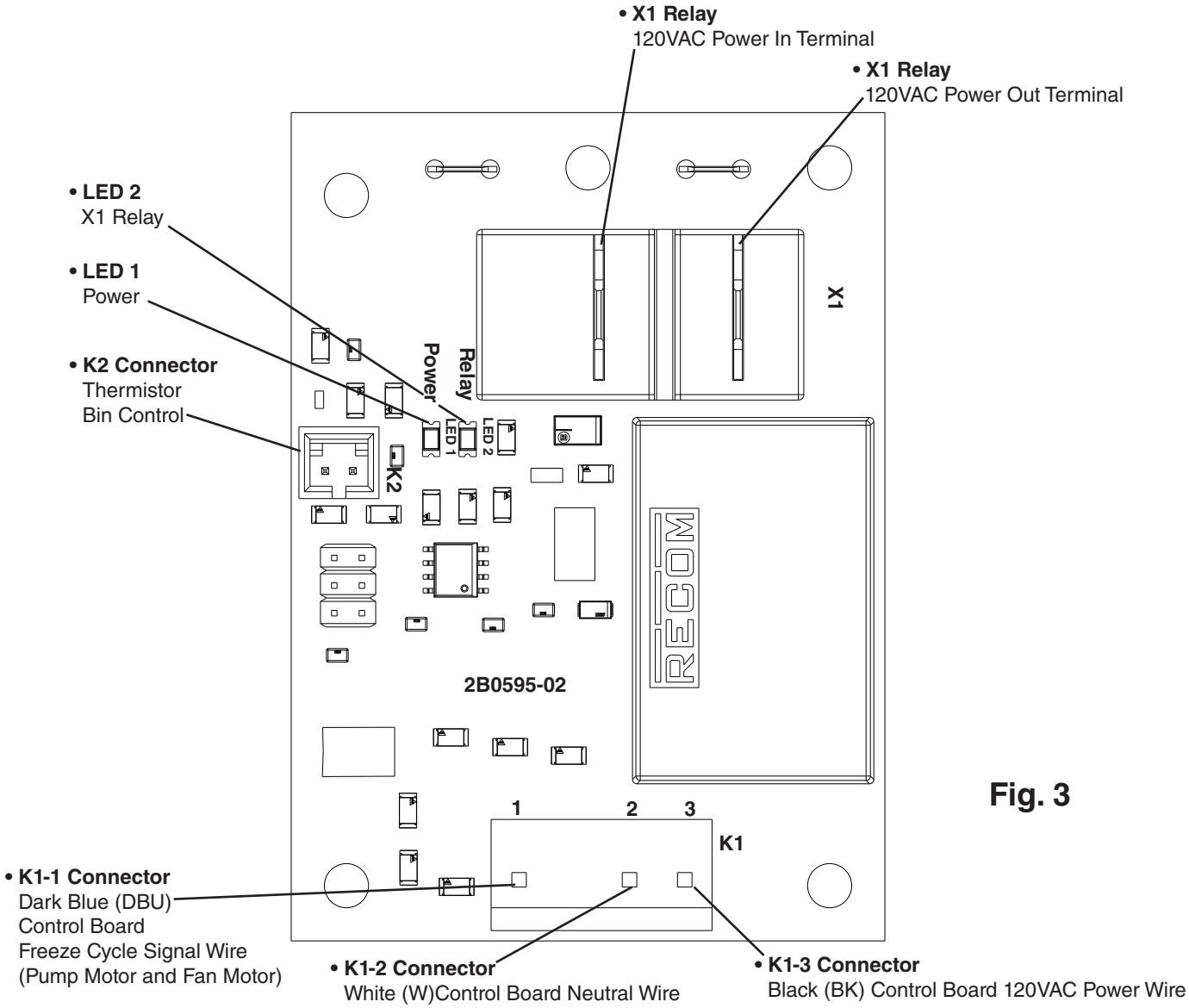

Fig. 3

6. LED Lights

a) **LED 1 115VAC** (POWER)

Green LED 1 "POWER" turns on solid to indicate proper 115VAC and continues unless the control switch is moved to the "OFF" position, or appliance is unplugged.

b) **LED 2 Icemaking (X1 Relay)**

Green LED 2 turns on when BCTH kΩ value is below the factory kΩ setting for icemaking. LED 2 turns off when BCTH kΩ value is above the factory kΩ setting for shutdown.

The C-80BAK(-DS)(-AD)(-ADDS) utilizes a control switch, time delay relay, water control relay, and compressor relay to control operation.

7. Control Switch

The control switch has 3 positions, "OFF," "ICE," and "DRAIN."

a) "OFF": All components except the optional drain pump are de-energized when the control switch is in the "OFF" position. The optional drain pump circuit remains energized when the control switch is in the "OFF" position.

b) "ICE": When placed in the "ICE" position, the inlet water valve energizes if upper float switch (UFS) is open. If upper float switch (UFS) is closed, gear motor and compressor energize.

c) "DRAIN": When placed in the "DRAIN" position, drain valve energizes, draining the reservoir and evaporator.

8. Time Delay Relay and Time Delay Relay Layout

Time delay relay energizes once 115VAC is supplied to time delay relay #5 (P) from the water control relay #3 (P). Time delay relay contacts close between time delay relay #8 power (BR) and time delay relay #9 gear motor (W/R), energizing the gear motor, fan motor, and compressor. When the lower float switch opens, the water control relay de-energizes, de-energizing the time delay relay. A 90 sec. low water safety timer starts. Once the upper float switch closes, the water control relay energizes, energizing the time delay relay. The time delay relay 90 sec. timer resets at this time. Once the 90 sec. low water safety timer is exceeded, gear motor, fan motor, and compressor de-energize.

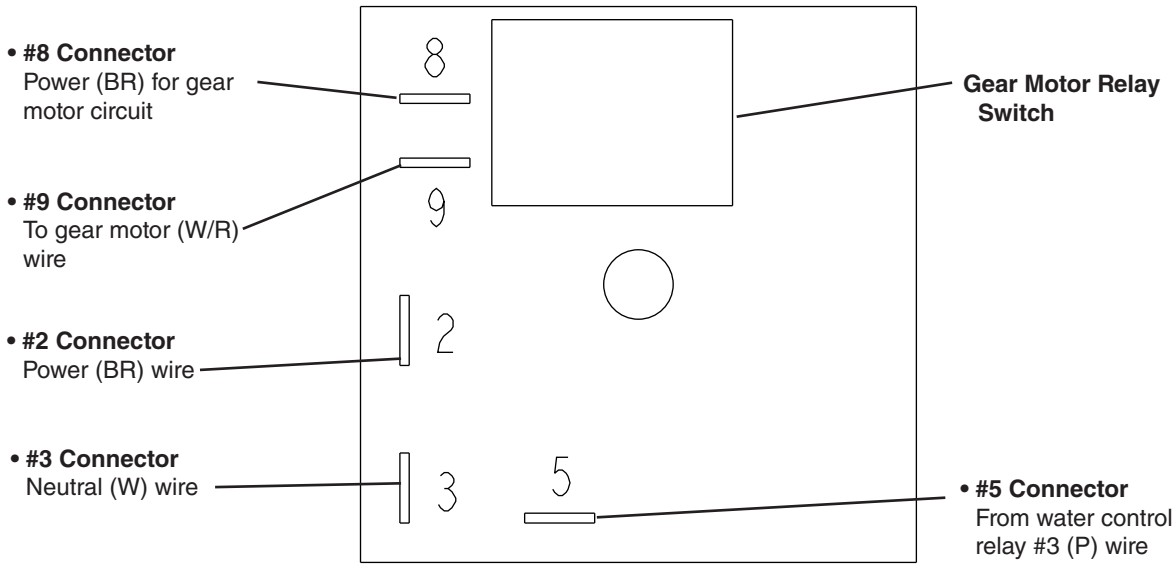

Fig. 4

9. Water Control Relay

The water control relay is controlled by the float switch. The water control relay energizes when the reservoir is full and the upper float switch closes. The water control relay de-energizes when the water in the reservoir lowers and the lower float switch opens. When energized, the time delay relay energizes and the inlet water valve de-energizes. When de-energized, the time delay relay de-energizes and the inlet water valve energizes.

C. Refrigeration Circuit Service

R-290 Class A3 Flammable Refrigerant Used

⚠ DANGER

Risk of Fire or Explosion. Flammable Refrigerant Used.

- Be sure to follow all Important Safety Information located at the beginning of this manual and at the beginning of section "III.A. Safety Precautions When Servicing."
- Servicing shall be done by trained service personnel with certified competence in handling flammable refrigerants to minimize the risk of possible ignition due to incorrect parts or improper service.
- Confirm that capacitors are discharged: this shall be done in a safe manner to avoid possibility of sparking.
- A dry chemical or CO_2 fire extinguisher should be adjacent to the charging area. You must have a Class B chemical fire extinguisher available at all times.
- When breaking into the refrigerant circuit to make repairs – or for any other purpose – conventional procedures shall be used. However, for flammable refrigerants it is important that best practice be followed, since flammability is a consideration. The following procedure shall be adhered to:
  - safely remove refrigerant following local and national regulations
  - purge the circuit with inert gas
  - evacuate (optional for A2L)
  - purge with inert gas (optional for A2L)
  - open the circuit by cutting
- Confirm that no live electrical components and wiring are exposed while charging, recovering, or purging the system.
- You must have a combustible gas leak detector in the immediate work area at all times.
- Be sure the area is clear of refrigerant vapor before brazing.
- The refrigerant charge shall be recovered into the correct recovery cylinders if venting is not allowed by local and national codes. For appliances containing flammable refrigerants, the system shall be purged with oxygen-free nitrogen to render the appliance safe for flammable refrigerants. This process might need to be repeated several times. Compressed air or oxygen shall not be used for purging refrigerant systems.

⚠ DANGER Continué

Risque De Feu Ou D'Explosion. Fluide Frigorigène Inflammable Utilisé.

- Assurez-vous de suivre toutes les informations importantes de sécurité qui se trouvent au début du présent manuel et au début de la section «III.A. Précautions de sécurité lors de l'entretien.»
- L'entretien doit être effectué par du personnel formé et certifié pour la manipulation de réfrigérants inflammables afin de réduire au minimum le risque d'inflammation dû à des pièces incorrectes ou à un entretien inadéquat.
- S'assurer que les condensateurs sont déchargés : cette opération doit être effectuée en toute sécurité afin d'éviter tout risque d'étincelle.
- Un extincteur à poudre chimique ou à CO_2 devrait être installé à proximité de la zone de chargement. Un extincteur chimique de classe B doit être disponible à tout moment.
- Pour pénétrer dans le circuit du réfrigérant afin d'effectuer des réparations ou pour toute autre raison, des procédures conventionnelles doivent être utilisées. Toutefois, pour les réfrigérants inflammables, il est important de suivre les meilleures pratiques, car l'inflammabilité est un facteur à prendre en considération. La procédure suivante doit être respectée:
  - éliminer le réfrigérant en toute sécurité conformément aux réglementations locales et nationales
  - purger le circuit avec du gaz inerte
  - évacuer (en option pour A2L)
  - purger avec du gaz inerte (en option pour A2L)
  - ouvrir le circuit par coupure
- S'assurer qu'aucun composant ou câblage électrique sous tension n'est exposé lors de la charge, de la récupération ou de la purge du système.
- Vous devez avoir un détecteur de fuite de gaz combustible dans la zone de travail immédiate en tout temps.
- Assurez-vous que la zone est dégagée de la vapeur de réfrigérant avant de braser.
- La charge réfrigérante doit être récupérée dans les bouteilles de récupération correctes si la ventilation n'est pas autorisée par les codes locaux et nationaux. Pour les appareils contenant des réfrigérants inflammables, le système doit être purgé avec de l'azote exempt d'oxygène pour assurer la sécurité de l'appareil pour les réfrigérants inflammables. Ce processus peut être répété plusieurs fois. L'air comprimé ou l'oxygène ne doivent pas être utilisés pour la purge des systèmes de réfrigérants.

⚠ WARNING

- Wear appropriate personal protective equipment (PPE) when servicing the appliance.
- Notify all persons in the immediate area that you are working with a flammable refrigerant.
- Do not use silver alloy or copper alloy containing arsenic.

a) Refrigerant Recovery

Using proper refrigerant practices, place piercing valves toward the end (crimped area) of the high and low-side process tubes, then recover the refrigerant into an approved container or device.

1) Move the control switch to the "OFF" position, then unplug the appliance from the electrical outlet.

b) Brazing

2) Prior to brazing, purge with nitrogen gas for 2 min., flowing at a pressure of 3 to 5 PSIG.
⚠ DANGER! For appliances containing flammable refrigerants, the system shall be purged with oxygen-free nitrogen to render the appliance safe for flammable refrigerants. This process might need to be repeated several times. Compressed air or oxygen shall not be used for purging refrigerant systems.

3) Braze/repair/replace damaged component or fittings while purging with nitrogen gas, flowing at a pressure of 3 to 5 PSIG.

NOTICE

- Do not leave the system open for longer than 15 min. when replacing or servicing parts. The Polyol Ester (POE) oils used in R-290 applications can absorb moisture quickly. Therefore it is important to prevent moisture from entering the system when replacing or servicing parts.
- Always install a new drier every time the sealed refrigeration system is opened. Do not replace the drier until after all other repair or replacement has been made. Install the new drier with the arrow on the drier in the direction of the refrigerant flow.
- When brazing, protect the drier by using a wet cloth to prevent the drier from overheating. Do not allow the drier to exceed 250°F (121°C).

4) Use soap bubbles to check for leaks. Raise the pressure using nitrogen gas (190 PSIG). Do not use any refrigerant as a mixture with pressurized air for leak testing.

5) Once leak checking is complete, release the nitrogen gas from the system.

c) Evacuation

6) Attach a vacuum pump to the system. Be sure the high-side charging hose is connected to the field-installed high-side access valve.

IMPORTANT

The vacuum level and vacuum pump may be the same as those for current refrigerants. However, the rubber hose and gauge manifold to be used for evacuation and refrigerant charge should be exclusively for POE oils.

7) Turn on the vacuum pump, then open the high-side valve on the gauge manifold. Never allow the oil in the vacuum pump to flow backwards.

8) Allow the vacuum pump to pull down to a 29.9" Hg vacuum. Evacuating period depends on pump capacity.

9) Close the high-side valve on the gauge manifold.

10) Disconnect the gauge manifold hose from the vacuum pump and attach it to a refrigerant service cylinder. Remember to loosen the connection and purge the air from the hose. See the nameplate for the required refrigerant charge. Hoshizaki recommends only virgin refrigerant or reclaimed refrigerant which meets the requirements of AHRI Standard 700 (latest edition) be used.

d) Recharge

⚠ DANGER

- In addition to conventional charging procedures, the following requirements shall be followed:
  - Ensure that contamination of different refrigerants does not occur when using charging equipment. Hoses or lines shall be as short as possible to minimize the amount of refrigerant contained in them.
  - Cylinders shall be kept in an appropriate position according to the instructions.
  - Ensure that the refrigerating system is earthed (grounded) prior to charging the system with refrigerant.
  - Label the system when charging is complete (if not already).
  - Extreme care shall be taken not to overfill the refrigerating system.
- The system shall be leak-tested on completion of charging but prior to commissioning. A follow up leak test shall be carried out prior to leaving the site.

- En plus des procédures de charge conventionnelles, les exigences suivantes doivent être respectées :
  - S'assurer qu'aucune contamination de différents réfrigérants ne se produit lors de l'utilisation de l'équipement de charge. Les tuyaux ou conduites doivent être aussi courts que possible afin de minimiser la quantité de réfrigérant qu'ils contiennent.
  - Les bouteilles doivent être maintenues dans une position appropriée conformément aux instructions.
  - S'assurer que le système de réfrigération soit mis à la terre avant de charger le système avec du réfrigérant.
  - Étiqueter le système lorsque la charge est terminée (si cela n'a pas déjà été fait).
  - Il faut veiller à ne pas trop remplir le système de réfrigération.
- Avant de recharger le système, celui-ci doit être testé sous pression avec le gaz de purge approprié. Le système doit être soumis à un essai de fuite à la fin de la charge, mais avant la mise en service. Un test de contrôle de fuite doit être effectué avant de quitter le site.

11) R-290 can be charged in either the liquid or vapor state. Liquid charge is preferred. If refrigerant charging is done in the liquid state, place the service cylinder on the scales; **if the service cylinder is not equipped with a dip tube, invert the service cylinder, then place it on the scales.** Open the high-side valve on the gauge manifold.

12) Allow the system to charge with liquid until the proper charge weight is met.

13) Close the high-side valve on the gauge manifold. If charging is complete, skip to step 10.

14) If necessary, add any remaining charge to the system through the low-side. ***NOTICE!*** **To prevent compressor damage, use a throttling valve or liquid dispensing device to add the remaining liquid charge through the low-side refrigerant access valve with the compressor running.** Close the refrigerant cylinder valve and let the low-side refrigerant equalize to the system, then close the low-side manifold gauge.

15) Pinch off (crimp down) the process tubes just below the piercing valves.

16) Remove the piercing valves. Cut the process tubes to remove the piercing valve holes.

17) Confirm there are no leaks from the pinched off process tubes, then braze the process tubes closed. ⚠ **DANGER! Be sure there is no refrigerant leak before brazing.**

18) Use a combustible gas leak detector or soap bubbles to check for leaks again.

19) Place red sleeves over the process tubes.

20) Plug the appliance back into the electrical outlet.

D. Component Service

R-290 Class A3 Flammable Refrigerant Used

⚠ DANGER

Risk of Fire or Explosion. Flammable Refrigerant Used.

- Be sure to follow all Important Safety Information located at the beginning of this manual and at the beginning of section "III.A. Safety Precautions When Servicing."
- Component parts shall be replaced with like components. So as to minimize the risk of possible ignition due to incorrect parts.
- This appliance should be diagnosed and repaired only by qualified service personnel to reduce the risk of death, electric shock, serious injury, or fire.
- Repair and maintenance to electrical components shall include initial safety checks and component inspection procedures. If a fault exists that could compromise safety, then no electrical supply shall be connected to the circuit until it is satisfactorily dealt with. If the fault cannot be corrected immediately but it is necessary to continue operation, an adequate temporary solution shall be used. This shall be reported to the owner of the equipment, so all parties are advised.
- Confirm that capacitors are discharged: this shall be done in a safe manner to avoid possibility of sparking.
- Confirm that no live electrical components and wiring are exposed while charging, recovering, or purging the system.
- Confirm that there is continuity of earth bonding (grounding).

⚠ DANGER Continué

Risque D'Incendie ou D'Explosion. Fluide Frigorigène Inflammable Utilisé.

- Assurez-vous de suivre toutes les informations importantes de sécurité qui se trouvent au début du présent manuel et au début de la section «III.A. Précautions de sécurité lors de l'entretien.»
- Les pièces doivent être remplacées par des pièces similaires, de manière à réduire au minimum le risque d'inflammation dû à des pièces incorrectes.
- Cet appareil ne doit être diagnostiqué et réparé que par un personnel qualifié afin de réduire les risques de mort, d'électrocution, de blessures graves ou d'incendie.
- La réparation et l'entretien des composants électriques incluent les contrôles de sécurité initiaux et les procédures d'inspection des composants. En cas de défaut susceptible de compromettre la sécurité, aucune alimentation électrique ne doit être connectée au circuit tant que le problème n'a pas été résolu de manière satisfaisante. Si le défaut ne peut être corrigé immédiatement mais qu'il est nécessaire de poursuivre l'exploitation, une solution temporaire adéquate doit être utilisée. Cela doit être signalé au propriétaire de l'équipement, afin que toutes les parties soient informées.
- S'assurer que les condensateurs sont déchargés : cette opération doit être effectuée en toute sécurité afin d'éviter tout risque d'étincelle.
- S'assurer qu'aucun composant ou câblage électrique sous tension n'est exposé lors de la charge, de la récupération ou de la purge du système.
- S'assurer de la continuité de la mise à la terre.

NOTICE
When replacing a component listed below, see the notes to help ensure proper operation.

Extruding Head	• Seal bolts must be replaced once removed because seal material is one-time use only. • If new seal bolts do not have preapplied threadlocker, apply Loctite 243 or equivalent threadlocker to seal bolt threads. • Tighten down the new seal bolts to a torque of 11.1 ft-lb/15 N·m.
Compressor	• Install a new drier and PTC relay.
Upper and Lower Bearings	• Inspect the upper bearing for wear. See "III.D.1. Upper Bearing Wear Check." Replace if necessary. • When replacing the upper bearing it is advised to also change the lower bearing at the same time.
Evaporator	• Install a new drier. • Inspect the mechanical seal and O-ring prior to installing the new evaporator. If worn, cracked, or scratched, the mechanical seal should also be replaced.
Gear Motor	• Install a new gear motor capacitor.

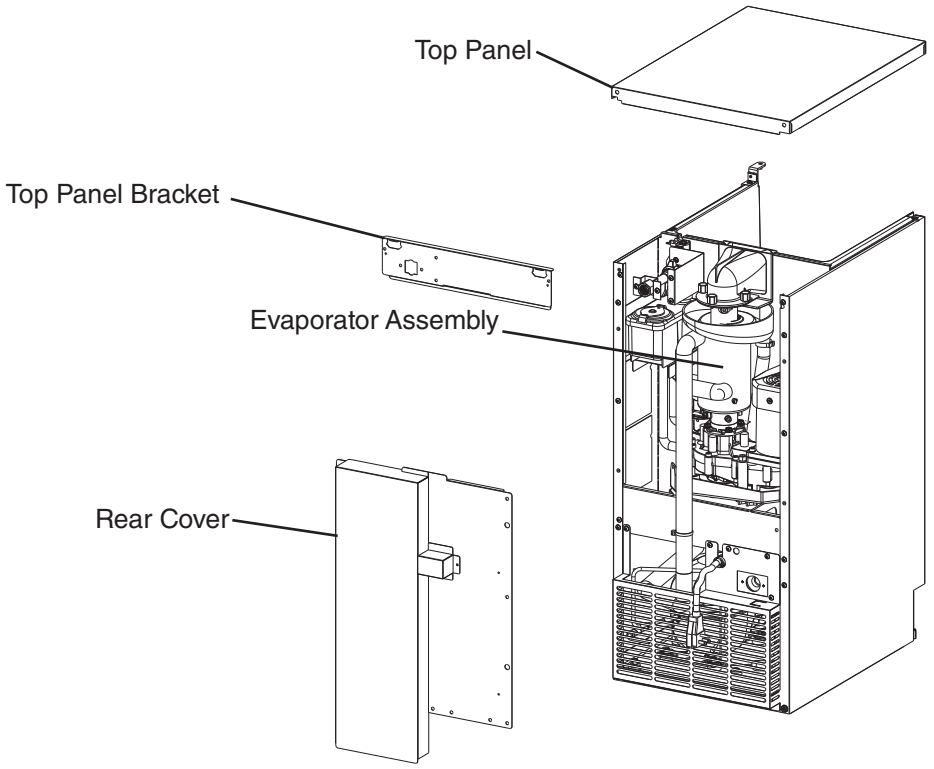

Fig. 5 **C-80BAK Shown**

Evaporator Assembly

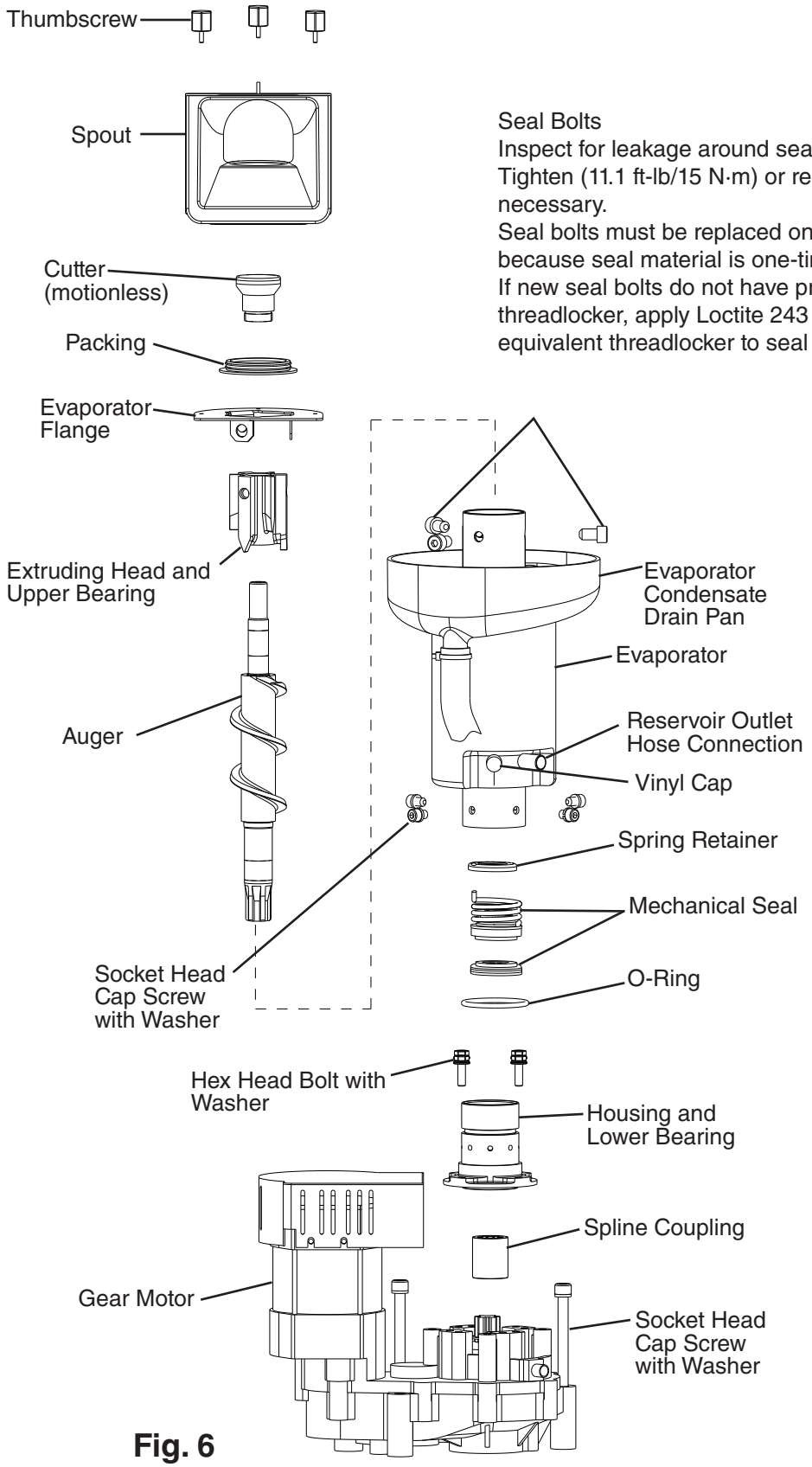

Seal Bolts
Inspect for leakage around seal bolts. Tighten (11.1 ft-lb/15 N·m) or replace as necessary.
Seal bolts must be replaced once removed because seal material is one-time use only. If new seal bolts do not have preapplied threadlocker, apply Loctite 243 or equivalent threadlocker to seal bolt threads.

Fig. 6

1. Upper Bearing Wear Check

To ensure that the bearing inside the extruding head does not exceed the wear tolerance of .02", follow the instructions below.

1) Move the control switch to the "OFF" position, then unplug the appliance from the electrical outlet.
2) Remove all ice from the storage bin.
3) Remove the top panel. See Fig. 5.
4) Remove the spout and packing.
5) Remove the cutter.
6) Grasp the top of the auger and move the auger towards you and then try to insert a .02" round stock or pin gauge in between the back side of the auger shaft and the bearing surface. See Fig. 7. Check several locations around the auger shaft. If the gauge goes between the shaft and the bearing at any point or if the bearing is scratched or cracked, both the top bearing in the extruding head and the lower bearing in the housing should be replaced. Instructions for removing the extruding head and housing are located later in this procedure.
   Note: Replacing the bearing requires a bearing press adaptor. If one is not available, replace the entire extruding head and housing.
7) Replace the removed parts and panel in the reverse order of which they were removed.
8) Plug the appliance into the electrical outlet, then move the control switch to the "ICE" position to start the automatic icemaking process.

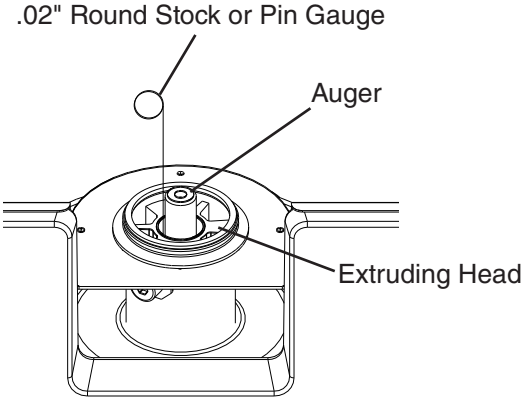

Fig. 7

2. Removal and Replacement of Extruding Head

1) Close the water supply line shut-off valve.
2) Move the control switch to the "DRAIN" position.
3) Allow the water system to drain for 1 minute.
4) Remove all ice from the storage bin.
5) After all of the water has drained, move the control switch to the "OFF" position. Unplug the appliance from the electrical outlet.
6) Remove the top panel. See Fig. 5.
7) Remove the spout and packing.
8) Loosen the cutter (do not remove).
9) Remove the seal bolts securing the extruding head and evaporator flange, then grasp the cutter and lift off. ***NOTICE!*** **Discard existing seal bolts after removal. Seal bolts must be replaced once removed because seal material is one-time use only.**
10) Remove the cutter from the old extruding head and place it on the new extruding head.
11) Place and align the new extruding head and evaporator flange. See Fig. 8.

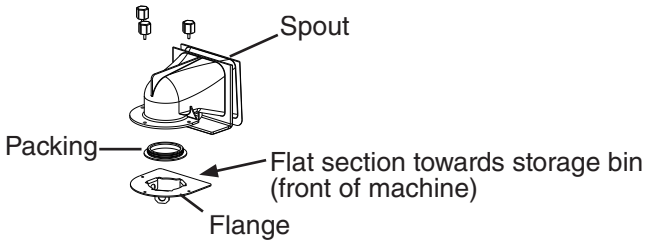

Fig. 8

12) If new seal bolts do not have preapplied threadlocker, apply Loctite 243 or equivalent threadlocker to seal bolts. Tighten new seal bolts to a torque of 11.1 ft-lb/15 N·m.
13) Tighten down the cutter.
14) Secure the packing and spout in their correct positions.
15) Open the water supply line shut-off valve.
16) Plug the appliance into the electrical outlet, then move the control switch to the "ICE" position to start the automatic icemaking process.
17) Once the appliance starts to produce ice, allow it to run for another 30 minutes. Check for water leaks.
18) After 30 minutes, move the control switch to the "OFF" position. Unplug the appliance from the electrical outlet.
19) Pour warm water into the storage bin and melt the ice. Clean the storage bin liner using a neutral cleaner. Rinse thoroughly after cleaning.
20) Replace the top panel in its correct position.
21) Plug the appliance into the electrical outlet, then move the control switch to the "ICE" position to start the automatic icemaking process.

3. Removal and Replacement of Auger

1) Close the water supply line shut-off valve.
2) Move the control switch to the "DRAIN" position.
3) Allow the water system to drain for 1 minute.
4) After all of the water has drained, move the control switch to the "OFF" position. Unplug the appliance from the electrical outlet.
5) Remove all ice from the storage bin.
6) Remove the top panel. See Fig. 5.
7) Remove the spout and packing.
8) Remove the seal bolts securing the extruding head and evaporator flange, then grasp the cutter and lift off. ***NOTICE!*** **Discard existing seal bolts after removal. Seal bolts must be replaced once removed because seal material is one-time use only.**
9) Grasp the auger and carefully lift out.
10) When pulling out the auger, the upper part of the mechanical seal should come out with it. The mechanical seal consists of two parts. One moves along with the auger, and the other is fixed on the lower housing. Inspect the part of the mechanical seal that came out with the auger. If the contact surface on the bottom of the seal is worn, cracked or scratched, the mechanical seal may cause water leaks and both the upper and lower parts of the mechanical seal should be replaced. Instructions for removing the mechanical seal are located later in this procedure.
11) Remove the mechanical seal from the old auger and place it on the new auger.
12) Install the new auger.
13) Replace the extruding head (with cutter), and evaporator flange in their correct positions. Confirm the cutter is tight. See Fig. 6.
14) If new seal bolts do not have preapplied threadlocker, apply Loctite 243 or equivalent threadlocker to seal bolts. Tighten to a torque of 11.1 ft-lb/15 N·m.
15) Replace the packing and spout in their correct positions.
16) Open the water supply line shut-off valve.
17) Plug the appliance into the electrical outlet, then move the control switch to the "ICE" position to start the automatic icemaking process.
18) Once the appliance starts to produce ice, allow it to run for another 30 minutes. Check for water leaks.
19) After 30 minutes, move the control switch to the "OFF" position. Unplug the appliance from the electrical outlet.
20) Pour warm water into the storage bin and melt the ice. Clean the storage bin liner using a neutral cleaner. Rinse thoroughly after cleaning.
21) Replace the top panel in its correct position.
22) Plug the appliance into the electrical outlet, then move the control switch to the "ICE" position to start the automatic icemaking process.

4. Removal and Replacement of Evaporator

NOTICE
• Always install a new drier every time the sealed refrigeration system is opened. Do not replace the drier until after all other repair or replacement has been made. • When brazing, protect the drier by using a wet cloth to prevent the drier from overheating. Do not allow the drier to exceed 250°F (121°C).

1) Close the water supply line shut-off valve.
2) Move the control switch to the "DRAIN" position.
3) Allow the water system to drain for 1 minute.
4) After all of the water has drained, move the control switch to the "OFF" position. Unplug the appliance from the electrical outlet.
5) Remove all ice from the storage bin.
6) Remove the top panel and rear panels. See Fig. 5.
7) Remove the spout and packing.
8) Remove the seal bolts securing the extruding head and evaporator flange. ***NOTICE!*** **Discard existing seal bolts after removal. Seal bolts must be replaced once removed because seal material is one-time use only.**
9) Grasp the cutter and carefully lift out the extruding head and auger. When pulling out the auger, the upper part of the mechanical seal should come out with it.
10) Disconnect the reservoir outlet hose from the evaporator.
11) Remove the evaporator condensate drain pan.
12) Install a temporary tap-line valve on the high side, then recover the refrigerant and store it in an approved container.
13) Disconnect the inlet and outlet tubing.
14) Remove the socket head cap screws securing the evaporator to the lower housing.
15) Lift off the evaporator.
16) Inspect the mechanical seal and O-ring prior to installing the new evaporator. The mechanical seal consists of two parts. One moves along with the auger, and the other is fixed on the lower housing. If the contact surfaces of these two parts are worn, cracked or scratched, the mechanical seal may cause water leaks and should be replaced. Instructions for removing the mechanical seal and lower housing are located later in this procedure.
17) Make sure the lower mechanical seal and the O-ring are in place, then place the evaporator assembly in position. Secure the evaporator to the lower housing using the socket head cap screws.
18) Replace the tap-line valve with a proper, permanent access valve.
19) Remove the drier, then place the new drier in position.
20) Braze all fittings while purging with nitrogen gas flowing at a pressure of 3 to 4 PSIG.

21) Use an electronic leak detector or soap bubbles to check for leaks. Add a trace of refrigerant to the system (if using an electronic leak detector), and then raise the pressure using nitrogen gas (140 PSIG).

22) Evacuate the system, then charge it with refrigerant. See the nameplate for the required refrigerant charge.

23) Reattach and secure the reservoir outlet hose. Replace the evaporator condensate drain pan and all hoses in their correct positions.

24) Install the auger assembly with the upper part of the mechanical seal attached. Replace the cutter, extruding head, and evaporator flange in their correct positions and align the extruding head and evaporator flange holes. See Fig. 6.

25) If new seal bolts do not have preapplied threadlocker, apply Loctite 243 or equivalent threadlocker to seal bolts. Tighten seal bolts to a torque of 11.1 ft-lb/15 N·m.

26) Replace the packing and spout in their correct positions.

27) Open the water supply line shut-off valve.

28) Plug the appliance into the electrical outlet, then move the control switch to the "ICE" position to start the automatic icemaking process.

29) Once the appliance starts to produce ice, allow it to run for another 30 minutes. Check for water leaks.

30) After 30 minutes, move the control switch to the "OFF" position. Unplug the appliance from the electrical outlet.

31) Pour warm water into the storage bin and melt the ice. Clean the storage bin liner using a neutral cleaner. Rinse thoroughly after cleaning.

32) Replace the rear panels and top panel in their correct positions.

33) Plug the appliance into the electrical outlet, then move the control switch to the "ICE" position to start the automatic icemaking process.

5. Removal and Replacement of Mechanical Seal and Lower Housing

a. Mechanical Seal

1) Close the water supply line shut-off valve.

2) Move the control switch to the "DRAIN" position.

3) Allow the water system to drain for 1 minute.

4) After all of the water has drained, move the control switch to the "OFF" position. Unplug the appliance from the electrical outlet.

5) Remove all ice from the storage bin.

6) Remove the top panel and rear cover See Fig. 5.

7) Remove the spout and packing.

8) Remove the seal bolts securing the extruding head and evaporator flange.
NOTICE! **Discard existing seal bolts after removal. Seal bolts must be replaced once removed because seal material is one-time use only.**

9) Grasp the cutter and carefully lift out the extruding head.

10) Grasp the auger and carefully lift it out. When pulling out the auger, the upper part of the mechanical seal should come out with it.

11) Remove the socket head cap screws securing the evaporator to the lower housing.

12) Raise the evaporator up to access the lower housing.

13) The mechanical seal consists of two parts. One moves along with the auger, and the other is fixed on the lower housing. If the contact surfaces of these two parts are worn, cracked or scratched, the mechanical seal may cause water leaks and should be replaced.

14) Remove the mechanical seal from the housing. If only replacing the mechanical seal, proceed to step 17. ***NOTICE*! To help prevent water leaks, be careful not to damage the surfaces of the O-ring or mechanical seal.**

b. Lower Housing

15) Remove the O-ring and the bolts securing the lower housing to the gear motor and remove the housing from the gear motor. If inspection of the upper bearing inside the extruding head (see "III.D.1. Upper Bearing Wear Check") indicates that it is out of tolerance, replace both it and the bearing inside the lower housing.

Note: Replacing the bearing requires a bearing press adaptor. If one is not available, replace the entire extruding head and housing.

16) Mount the lower housing onto the gear motor, then install the O-ring onto the lower housing.

17) Install the lower part of the mechanical seal onto the lower housing.

18) Lower the evaporator down and secure it to the lower housing.

19) Install the auger assembly with the upper part of the mechanical seal attached. Replace the cutter, extruding head, and evaporator flange in their correct positions. Align the evaporator flange holes with the extruding head holes. See Fig. 6.

20) If new seal bolts do not have preapplied threadlocker, apply Loctite 243 or equivalent threadlocker to seal bolts. Tighten new seal bolts to a torque of 11.1 ft-lb/15 N·m.

21) Tighten the cutter on the auger.

22) Replace the packing and spout in their correct positions.

23) Open the water supply line shut-off valve.

24) Plug the appliance into the electrical outlet, then move the control switch to the "ICE" position to start the automatic icemaking process.

25) Once the appliance starts to produce ice, allow it to run for another 30 minutes. Check for water leaks.

26) After 30 minutes, move the control switch to the "OFF" position. Unplug the appliance from the electrical outlet.

27) Pour warm water into the storage bin and melt the ice. Clean the storage bin liner using a neutral cleaner. Rinse thoroughly after cleaning.

28) Replace the rear cover and top panel in their correct positions.

29) Plug the appliance into the electrical outlet, then move the control switch to the "ICE" position to start the automatic icemaking process.

6. Removal and Replacement of Gear Motor

***NOTICE!* Hoshizaki recommends that the gear motor capacitor be replaced at the same time as the gear motor.**

1) Close the water supply line shut-off valve.
2) Move the control switch to the "DRAIN" position.
3) Allow the water system to drain for 1 minute.
4) After all of the water has drained, move the control switch to the "OFF" position, then unplug the appliance from the electrical outlet.
5) Remove all ice from the storage bin.
6) Remove the top panel and rear cover. See Fig. 5.
7) Remove the bolts securing the lower housing to the gear motor. Lift the evaporator up slightly.
8) Remove the bolts securing the gear motor.
9) Disconnect the gear motor wires, then remove the gear motor.
10) Attach the spline coupling from the old gear motor to the new gear motor.
11) Install the new gear motor.
12) Lower the evaporator onto the gear motor. Secure the lower housing to the gear motor.
13) Reconnect the electrical wires.
14) Open the water supply line shut-off valve.
15) Plug the appliance into the electrical outlet, then move the control switch to the "ICE" position to start the automatic icemaking process.
16) Once the appliance starts to produce ice, check for water leaks.
17) Move the control switch to the "OFF" position, then unplug the appliance from the electrical outlet.
18) Pour warm water into the storage bin and melt the ice. Clean the storage bin liner using a neutral cleaner. Rinse thoroughly after cleaning.
19) Replace the rear cover and top panel in their correct positions.
20) Plug the appliance into the electrical outlet, then move the control switch to the "ICE" position to start the automatic icemaking process.

IV. Maintenance

The appliance must be maintained in accordance with the instruction manual and labels provided. Consult with your local Hoshizaki Certified Service Representative about maintenance service.

⚠ WARNING

- Only qualified service technicians should service this appliance.
- Failure to install, operate, and maintain the appliance in accordance with this manual will adversely affect safety, performance, component life, and warranty coverage.
- Move the control switch to the "OFF" position and unplug the appliance from the electrical outlet before servicing.
- To reduce the risk of electric shock, do not touch the control switch or plug with damp hands.
- **CHOKING HAZARD:** Ensure all components, fasteners, and thumbscrews are securely in place after any maintenance is performed. Make sure that none have fallen into the ice storage bin.
- After service, make sure that there are no wires pinched between the panels and appliance. Make sure you do not damage or pinch the water supply line, drain line, or power cord.

A. Maintenance Schedule

The maintenance schedule below is a guideline. More frequent maintenance may be required depending on water quality, the appliance's environment, and local sanitation regulations.

Maintenance Schedule		
Frequency	**Area**	**Task**
Weekly	Scoop	Clean the scoop using a neutral cleaner. Rinse thoroughly after cleaning.
Monthly	Drain the Appliance	Move the control switch to the "DRAIN" position. Allow the water system to drain for 1 minute. Clear ice away from the bin control bulb. Move the control switch to the "ICE" position. After the gear motor starts, move the control switch to the "DRAIN" position. Allow the water system to drain for 1 minute. Move the control switch to the "ICE" position to start the automatic icemaking process.
	Appliance Exterior	Wipe down with a clean, soft cloth. Use a damp cloth containing a neutral cleaner to wipe off oil or dirt build up. Clean any chlorine staining (rust colored spots) using a non-abrasive cleanser.
Every 3 Months	Storage Bin Drain	Maintain as outlined in the instruction manual.
Every 6 Months	Icemaker and Storage Bin	Clean and sanitize per the cleaning and sanitizing instructions provided in the instruction manual.
	Evaporator Condensate Drain Pan and Gear Motor Drain Pan	Wipe down with clean cloth and warm water.
	Extruding Head Seal Bolts	Inspect for leakage around seal bolts. Tighten (see torque value below) or replace as necessary. Seal bolts must be replaced once removed because seal material is one-time use only. If new seal bolts do not have preapplied threadlocker, apply Loctite 243 or equivalent threadlocker to seal bolt threads.
		Torque: 11.1 ft-lb/15 N·m Tighten 2 times. Allow at least 5 sec. in between each tightening.
	Optional Drain Pump (HS-5061)	Test as outlined in "IV.B. Optional Drain Pump HS-5061."
	External Water Filters	Check for proper pressure and change if necessary.
Yearly	Water Supply Inlet	Close the water supply line shut-off valve and drain the water system. Clean the water supply inlet screen.
	Condenser	Inspect. Clean if necessary.
	Water Hoses	Inspect the water hoses and clean/replace if necessary.
	Upper Bearing (extruding head)	Check for wear using .02" round stock or pin gauge. Replace both upper bearing and lower bearing if wear exceeds factory recommendations. See "III.D.1. Upper Bearing Wear Check."
After 3 Years, then Yearly	Upper Bearing (extruding head); Lower Bearing and O-Ring (lower housing); Mechanical Seal; Evaporator Cylinder; Auger	Inspect. Replace both upper bearing and lower bearing if wear exceeds factory recommendations. Replace the mechanical seal if the seal's contact surfaces are worn, cracked, or scratched.

B. Optional Drain Pump HS-5061

1. Overview

As ice melts, water drains from the storage bin into DP. LFS closes. Nothing happens at this time. UFS closes, DP energizes and pumps out the water. UFS opens, nothing happens at this time. LFS opens, DP de-energizes. If water cannot be pumped out of DP due to a blocked discharge hose, bad check valve, or bad DP motor, water level continues to rise and SFS closes. DP continues and appliance de-energizes. Power is supplied to DP motor as long as LFS is closed. For schematic, see "VII.B.2. Optional Drain Pump HS-5061."

NOTICE
• If you remove DP from the appliance, be sure to follow all instructions below. Failure to do so may result in costly water damage. • DP has an internal check valve. Do not install an external check valve.

Legend: **DP**–drain pump; **LFS**–lower float switch; **SFS**–safety float switch; **UFS**–upper float switch

2. Drain Pump Check

When the optional DP (HS-5061) is installed, test its operation at least twice a year as outlined below. Note that 115VAC is at DP even when the control switch is in the "OFF" position.

1) Move the control switch to the "OFF" position, then unplug the appliance from the electrical outlet. **WARNING! To reduce the risk of electric shock, do not touch the control switch or plug with damp hands.**
2) Remove all ice from the storage bin.
3) Plug the appliance back in.
4) Slowly pour 24 to 30 oz. (710 to 890 ml) of water over the storage bin drain hole in the storage bin.
5) If water pumps out properly and DP then de-energizes, proceed to step 6. If water does not pump out, confirm 115VAC to drain pump, replace as needed.
6) Move the control switch to the "ICE" position.
7) Pour another 24 to 30 oz. (710 to 890 ml) of water into the appliance's storage bin, then completely restrict the discharge hose while DP is operating. See Fig. 9. Pour more water into the appliance's storage bin until the appliance turns off. DP will continue to operate. Check for leaks.
8) Remove the discharge hose restriction and allow the water to be pumped out normally. Power returns to the appliance when SFS opens. For optional drain pump (HS-5061) installation, refer to the instructions included with the pump.
8) Place the icemaker in the final installation location. **WARNING! Protect the floor when moving the icemaker to prevent damage to the floor. Make sure you do not damage or pinch the water supply line, discharge tubing, drain connections, or power cord. Be sure there is sufficient extra tubing for the unit to be pulled out for service.**
9) If the appliance fails to turn off with the discharge hose restricted or the pump fails to pump out the water, replace DP.

Legend: **DP**–drain pump; **SFS**–safety float switch

Fig. 9

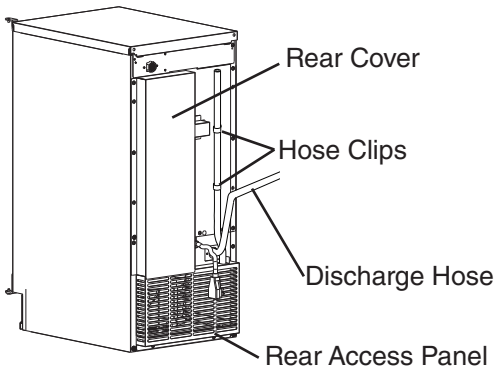

V. Preparing the Appliance for Periods of Non-Use

⚠ DANGER

Risk of Fire or Explosion. Flammable Refrigerant Used.

- Be sure to follow all Important Safety Information located at the beginning of this manual and at the beginning of section "III.A. Safety Precautions When Servicing."
- Only qualified service technicians should service this appliance.
- The appliance shall be stored in an area where the room size corresponds to the room area as specified for operation. See the nameplate or instruction manual for Minimum Room Floor Area.
- The appliance shall be stored in a room without continuously operating open flames (for example an operating gas appliance) or other potential ignition sources (for example an operating electric heater, hot surfaces).

Risque D'Incendie ou D'Explosion. Fluide Frigorigène Inflammable Utilisé.

- Assurez-vous de suivre toutes les informations importantes de sécurité qui se trouvent au début du présent manuel et au début de la section «III.A. Précautions de sécurité lors de l'entretien.»
- Seuls des techniciens de service qualifiés doivent installer et entretenir l'appareil.
- L'appareil doit être conservé dans une zone où la taille de la pièce correspond à la surface de la pièce spécifiée pour le fonctionnement.
- L'appareil doit être entreposé dans un local ne contenant pas de sources d'inflammation permanentes (flammes nues, appareil à gaz ou dispositif de chauffage électrique en fonctionnement, par exemple).

NOTICE

- During extended periods of non-use, extended absences, or in sub-freezing temperatures, follow the instructions below to reduce the risk of costly water damage.
- When the appliance is not used for two or three days under normal conditions, it is sufficient to move the control switch to the "OFF" position.

1) Move the control switch to the "OFF" position. **WARNING! To reduce the risk of electric shock, do not touch the control switch or plug with damp hands.**
2) Close the water supply line shut-off valve, then open the water supply line drain valve.
3) Allow the line to drain by gravity.
4) Move the control switch to the "DRAIN" position.
5) Allow the water system to drain for 1 min.
6) Attach a compressed air or carbon dioxide supply to the water supply line drain valve.
7) Move the control switch to the "ICE" position.
8) Blow the water supply line out using the compressed air or carbon dioxide supply.
9) Close the water supply line drain valve.
10) Move the control switch to the "OFF" position, then unplug the appliance from the electrical outlet.
11) Remove the screws securing the rear cover, then remove it. See Fig. 10.
12) Remove the clamp securing the reservoir outlet hose to the reservoir. Disconnect the reservoir outlet hose from the reservoir.
13) Attach a compressed air or carbon dioxide supply to the reservoir outlet hose.

Fig. 10

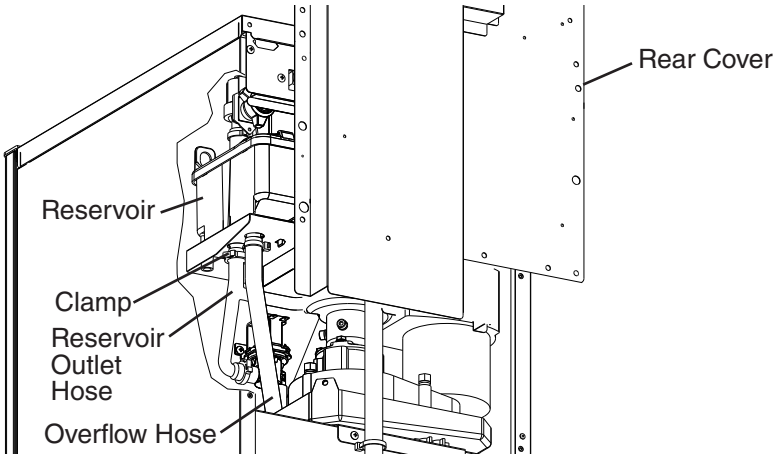

14) Plug the appliance back in, then move the control switch to the "DRAIN" position.
15) Blow out the reservoir outlet hose using the compressed air or carbon dioxide supply.
16) Move the control switch to the "OFF" position, then unplug the appliance from the electrical outlet.
17) Reconnect the reservoir outlet hose to the reservoir, then secure with the clamp. Make sure all hoses are connected and secure.
18) Replace the rear cover in its correct position.
19) Clean the storage bin by using a neutral cleaner. Rinse thoroughly after cleaning.

VI. Decommissioning and Disposal

R-290 Class A3 Flammable Refrigerant Used

⚠ DANGER

Risk of Fire or Explosion. Flammable Refrigerant Used.

- Be sure to follow all Important Safety Information located at the beginning of this manual and at the beginning of section "III.A. Safety Precautions When Servicing."
- Servicing shall be done by trained service personnel with certified competence in handling flammable refrigerants to minimize the risk of possible ignition due to improper service.
- Follow handling instructions carefully in compliance with national regulations.
- Dispose of properly in accordance with federal or local regulations.
- Do not puncture refrigerant tubing. Risk of fire or explosion due to puncture of refrigerant tubing; follow handling instructions carefully.
- When removing refrigerant from a system, either for servicing or decommissioning, it is recommended good practice that all refrigerants are removed safely.
- When transferring refrigerant into cylinders, ensure that only appropriate refrigerant recovery cylinders are employed. Ensure that the correct number of cylinders for holding the total system charge is available. All cylinders to be used are designated for the recovered refrigerant and labeled for that refrigerant (i.e., special cylinders for the recovery of refrigerant). Cylinders shall be complete with pressure-relief valve and associated shut-off valves in good working order. Empty recovery cylinders are evacuated and, if possible, cooled before recovery occurs.
- The recovery equipment shall be in good working order with a set of instructions concerning the equipment that is at hand and shall be suitable for the recovery of all appropriate refrigerants including, when applicable, flammable refrigerants.
  In addition, a set of calibrated weighing scales shall be available and in good working order. Hoses shall be complete with leak-free disconnect couplings and in good condition. Before using the recovery machine, check that it is in satisfactory working order, has been properly maintained and that any associated electrical components are sealed to prevent ignition in the event of a refrigerant release. Consult manufacturer if in doubt.
- The recovered refrigerant shall be returned to the refrigerant supplier in the correct recovery cylinder, and the relevant waste transfer note arranged. Do not mix refrigerants in recovery units and especially not in cylinders.
- If compressors or compressor oils are to be removed, ensure that they have been evacuated to an acceptable level to make certain that flammable refrigerant does not remain within the lubricant. The evacuation process shall be carried out prior to returning the compressor to the suppliers. Only electric heating to the compressor body shall be employed to accelerate this process. When oil is drained from a system, it shall be carried out safely.

⚠ DANGER Continué

Risque D'Incendie ou D'Explosion. Fluide Frigorigène Inflammable Utilisé.

- Assurez-vous de suivre toutes les informations importantes de sécurité qui se trouvent au début du présent manuel et au début de la section «III.A. Précautions de sécurité lors de l'entretien.»
- L'entretien doit être effectué par du personnel formé et certifié pour la manipulation de réfrigérants inflammables afin de réduire au minimum le risque d'inflammation dû à un entretien inadéquat.
- Suivre attentivement les instructions de manutention conformément aux réglements nationaux.
- Mettre au rebut conformément aux conformément aux réglements fédéraux ou locaux.
- Ne pas perforer la conduite de fluide frigorigène. Risque d'incendie ou d'explosion en cas de perforation d'une canalisation de fluide frigorigène; suivez attentivement les instructions de manutention.
- Lors de l'élimination du réfrigérant d'un système, que ce soit pour l'entretien ou la mise hors service, il est recommandé de veiller à ce que tous les réfrigérants soient éliminés en toute sécurité.
- Lors du transfert de réfrigérant dans des bouteilles, veillez à ce que seules des bouteilles de récupération de réfrigérant appropriées soient utilisées. Assurez-vous que le nombre de bouteilles nécessaires pour contenir la charge totale du système est disponible. Toutes les bouteilles à utiliser sont désignées pour le réfrigérant récupéré et étiquetées pour ce réfrigérant (c'est-à-dire des bouteilles spéciales pour la récupération du réfrigérant). Les bouteilles doivent être équipées d'une soupape de surpression et de soupapes d'arrêt associées en bon état de fonctionnement. Les bouteilles de récupération vides sont évacuées et, si possible, refroidies avant la récupération.
- L'équipement de récupération doit être en bon état de fonctionnement, accompagné d'un ensemble d'instructions concernant l'équipement disponible et doit être adapté à la récupération de tous les réfrigérants appropriés, y compris, le cas échéant, les réfrigérants inflammables. En outre, un ensemble de balances étalonnées doit être disponible et en bon état de fonctionnement. Les tuyaux doivent être complets, équipés de raccords de déconnexion sans fuite et en bon état. Avant d'utiliser la machine de récupération, vérifiez qu'elle est en bon état de fonctionnement, qu'elle a été correctement entretenue et que tous les composants électriques associés sont scellés pour éviter toute inflammation en cas de fuite de réfrigérant. Consulter le fabricant en cas de doute.
- Le réfrigérant récupéré doit être renvoyé au fournisseur de réfrigérant dans la bouteille de récupération appropriée et le bon de transfert de déchets correspondant doit être établi. Ne mélangez pas les réfrigérants dans les unités de récupération et surtout pas dans les bouteilles.

⚠ DANGER Continué

- Si les compresseurs ou les huiles de compresseur doivent être retirés, assurez-vous qu'ils ont été évacués à un niveau acceptable afin de s'assurer qu'il ne reste pas de réfrigérant inflammable dans le lubrifiant. Le processus d'évacuation doit être effectué avant que le compresseur ne soit renvoyé aux fournisseurs. Seul le chauffage électrique du boîtier du compresseur doit être utilisé pour accélérer ce processus. Lorsque l'huile est vidangée d'un système, cette opération doit être effectuée en toute sécurité.

The appliance contains refrigerant and must be disposed of in accordance with applicable national, state, and local codes and regulations. Refrigerant must be recovered and safely disposed of by properly trained service personnel.

Before carrying out this procedure, it is essential that the technician is completely familiar with the equipment and all its detail. It is recommended good practice that all refrigerants are recovered safely. Prior to the task being carried out, an oil and refrigerant sample shall be taken in case analysis is required prior to re-use of recovered refrigerant. It is essential that electrical power is available before the task is commenced.

- Become familiar with the equipment and its operation.
- Isolate the system electrically.
- **Before attempting the procedure, ensure that:**
  - mechanical handling equipment is available, if required, for handling refrigerant cylinders
  - all personal protective equipment is available and being used correctly
  - the recovery process is supervised at all times by a competent person
  - recovery equipment and cylinders conform to the appropriate standards
- Pump down refrigerant system, if possible.
- If a vacuum is not possible, make a manifold so that refrigerant can be removed from various parts of the system.
- Make sure that cylinder is situated on the scales before recovery takes place.
- Start the recovery machine and operate in accordance with instructions.
- Do not overfill cylinders (no more than 80% volume liquid charge).
- Do not exceed the maximum working pressure of the cylinder, even temporarily.
- When the cylinders have been filled correctly and the process completed, make sure that the cylinders and the equipment are removed from site promptly and all isolation valves on the equipment are closed off.
- Recovered refrigerant shall not be charged into another refrigerating system unless it has been cleaned and checked.

Follow the steps below for decommissioning and disposal:

1. Recovery

1) Recover the refrigerant, and safely dispose of the refrigerant.
2) Evacuate the appliance.
3) Purge the refrigeration system with nitrogen.
4) Cut out the compressor and drain and dispose of the compressor oil. Compressor oils are to be removed, ensure that they have been evacuated to an acceptable level to make certain that flammable refrigerant does not remain within the lubricant. Dispose of compressor and compressor oil in compliance with national, state, and local codes and regulations.
5) Purge the refrigeration system with nitrogen.

2. Labeling

Equipment shall be labeled stating that it has been de-commissioned and emptied of refrigerant. The label shall be dated and signed. For appliances containing flammable refrigerant, ensure that there are labels on the equipment stating the equipment contains flammable refrigerant.

VII. Technical Information

A. Specification and Performance Data

1. C-80BAK(-DS)(-AD)(-ADDS)

Specification Sheet

AC SUPPLY VOLTAGE (V/Hz/PH)	115/60/1	
AMPERAGE (A)	2.8	
MINIMUM CIRCUIT AMPACITY (A)	15	
MAXIMUM FUSE SIZE (A)	15	
ELECTRIC & WATER CONSUMPTION (Wtr/Air)(°C/°F)	32/21 (90/70)	21/10 (70/50)
ELECTRIC W (kWH/100 lbs.)	210 (8.5)	210 (5.48)
WATER gal./24HR (gal./100 lbs.)	7.8 (12.0)	11.1 (12.0)
SHAPE OF ICE	Cubelet	
ICE HARDNESS	Approx. 85%, Ice (32/21 (90/70))	
ICE PRODUCTION PER CYCLE (lbs/kg)	27 (12.5)	
HARVEST RATE (lbs/day)	<=1000	
APPROXIMATE STORAGE CAPACITY (lbs/kg)	27 (12.5)	
ICE MAKING SYSTEM	Auger Type	
HARVESTING CONTROL SYSTEM	Direct Drive Auger	
ICE MAKING WATER CONTROL	Float Switch	
BIN CONTROL SYSTEM	Thermistor	
REFRIGERANT CHARGE (g/oz.)	R290, 54 (1.9)	
FOAM BLOWING AGENT	HFO 1233zd (E)	
DESIGN PRESSURE kPa (PSI)	HI-1924 (279) LO-896 (130)	

Performance Data Sheet

APPROXIMATE ICE PRODUCTION PER 24 HR.	AMBIENT TEMP. (°F/°C)	WATER TEMP. (°F/°C) 50/10		70/21		90/32	
	70/21	**92**	42	84	38	90	41
	80/27	86	39	74	33	81	37
	90/32	84	38	**65**	29	69	31
lbs./day (kg./day)	100/38	86	39	63	29	**59**	27
APPROXIMATE ELECTRIC CONSUMPTION	70/21	**210**		210		222	
	80/27	210		210		228	
	90/32	210		**210**		226	
watts	100/38	219		214		**240**	
APPROXIMATE WATER CONSUMPTION PER 24 HR.	70/21	**11**	0.04	10	0.04	10	0.04
	80/27	10	0.04	9	0.03	9	0.03
	90/32	10	0.04	**8**	0.03	7	0.03
gal./day (m^3/day)	100/38	9	0.03	8	0.03	**7**	0.03
EVAPORATOR OUTLET TEMP. °F (°C)	70/21	21.2	-6	22.3	-5	24.7	-4
	80/27	22.0	-6	23.6	-5	26.6	-3
	90/32	22.3	-5	24.8	-4	27.6	-2
	100/38	23.1	-5	24.8	-4	30.2	-1
HEAD PRESSURE	70/21	**176**	12.4	192	13.5	209	14.7
	80/27	188	13.2	213	15.0	227	16.0
	90/32	192	13.5	**231**	16.2	247	17.3
PSIG (kg/cm^2G)	100/38	194	13.6	235	16.5	**261**	18.4
SUCTION PRESSURE	70/21	**32**	2.2	33	2.3	34	2.4
	80/27	33	2.3	35	2.4	36	2.5
	90/32	33	2.3	**36**	2.5	37	2.6
PSIG (kg/cm^2G)	100/38	33	2.3	36	2.5	**38**	2.7
TOTAL HEAT OF REJECTION FROM CONDENSER	1,200 BTU/h [AT 90ºF (32ºC) / WT 70ºF (21ºC)]						
TOTAL HEAT OF REJECTION FROM COMPRESSOR	200 BTU/h [AT 90ºF (32ºC) / WT 70ºF (21ºC)]						

B. Wiring Diagrams

1. C-80BAK(-DS)(-AD)(-ADDS)

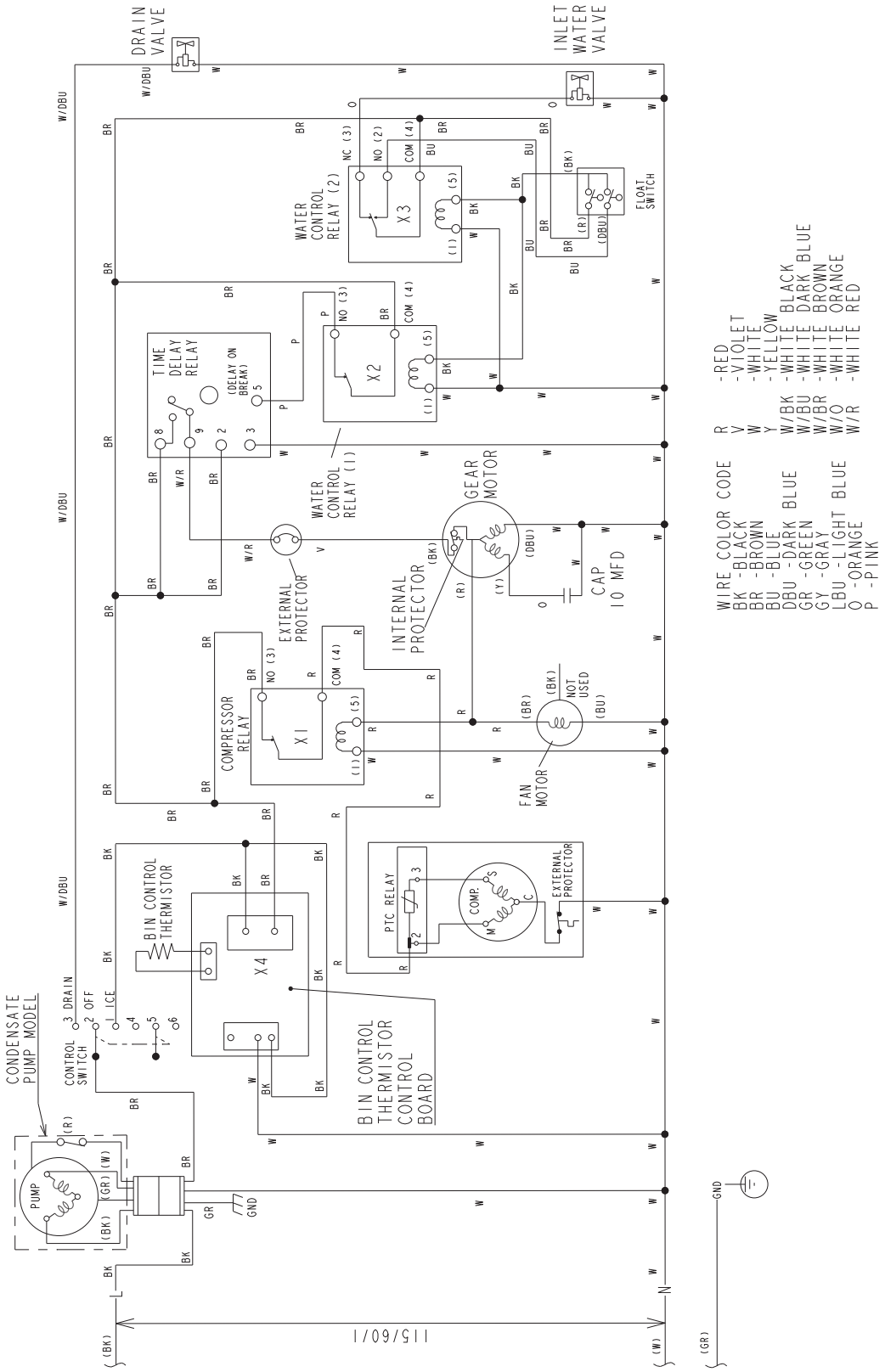
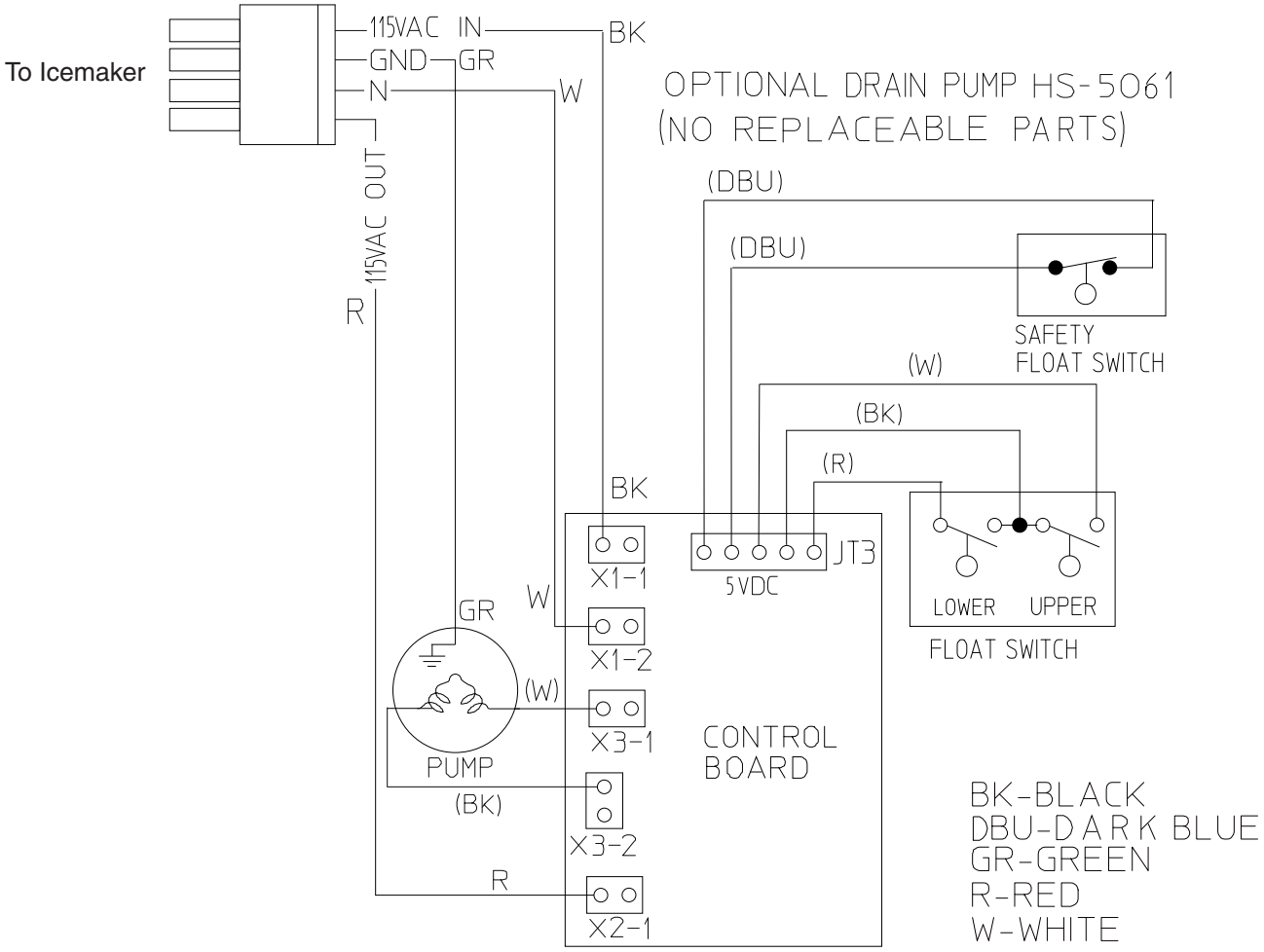
2. Optional Drain Pump HS-5061