Instruction Manual

Floss Boss

Model No. 3024 (Domestic), 3024EX (Export)

GOLD MEDAL® PRODUCTS CO.

10700 Medallion Drive, Cincinnati, Ohio 45241-4807 USA

Part No. 42543

SAFETY PRECAUTIONS

⚠ DANGER

Machine must be properly grounded to prevent electrical shock to personnel. Failure to do so could result in serious injury, or death.
Do NOT immerse any part of this equipment in water.
Do NOT use excessive water when cleaning.
Keep cord and plug off the ground and away from moisture.
Always unplug the equipment before cleaning or servicing.

008GEND1012

⚠ DANGER

Improper installation, adjustment, alteration, service or maintenance can cause property damage, injury or death. Read the Installation, Operating, and Maintenance Instructions thoroughly before installing, servicing, or operating this equipment.

014FMD1012

⚠ WARNING

Floss head rotates at high speeds. Operator MUST keep hands and face clear of the floss head to avoid possible injury. Keep all spectators at a reasonable distance, and use a Floss Bubble for added customer protection.

015FMW1012

⚠ WARNING

Keep all foreign objects out of floss head. To avoid possible eye injury, do NOT fill floss head with sugar while the head is on and rotating.

016FMW1012

⚠ CAUTION

Do NOT allow direct contact of this equipment by the public when used in food service locations. Only personnel trained and experienced in the equipment operation may operate this equipment.
Carefully read all instructions before operation.

012GENC1012

⚠ CAUTION

This machine is NOT to be operated by minors. Minors are classified as anyone under the age of 18.

007GENC1012

NOTE: Improvements are always being made to Gold Medal's equipment. This information may not be the latest available for your purposes. It is critical that you call Gold Medal's Technical Service Department at 1-800-543-0862 for any questions about your machine operations, replacement parts, or any service questions.

INSTALLATION INSTRUCTIONS

Inspection of Shipment

After unpacking, check thoroughly for any damage which may have occurred in transit. Claims should be filed immediately with the transportation company. The warranty does not cover damage that occurs in transit, or damage caused by abuse, or consequential damage due to the operation of this machine, since it is beyond our control.

Setup

Your new floss machine unit is completely assembled and tested at the factory. Remove all packing material and tape before starting operation.

1. Lower the shipping bracket so the bell housing "floats" freely on the springs. Unscrew and push down the two knobs on each side of the cabinet top to lower the shipping bracket completely.
2. Make sure the floss ribbon(s) (heating element) located inside the head assembly has not shaken out of the band during transportation. If the ribbon is out of the band, push it back into place manually, before plugging in machine.

Bell Housing

Shipping Bracket

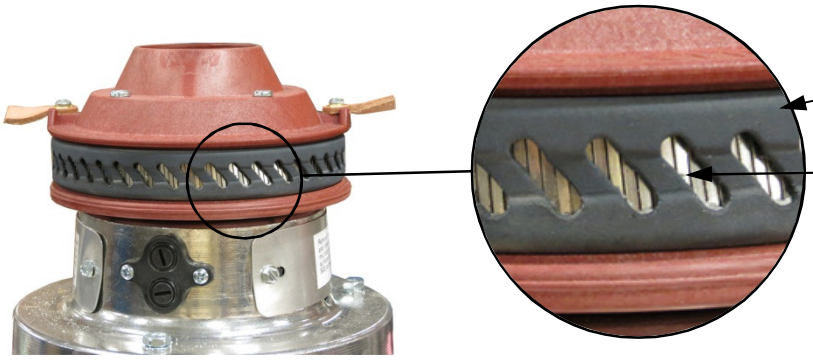

Band

Floss Ribbon seen Correctly Sitting in the Bands

Electrical Requirements

The following power supply must be provided for your Floss Machine:

3024: 120Volts, 1248 Watts, 60 Hz
3024EX: 230Volts, 1702Watts, 50/60Hz.

⚠ DANGER

Machine must be properly grounded to prevent electrical shock to personnel. Failure to do so could result in serious injury, or death.

Do NOT immerse any part of this equipment in water.

Do NOT use excessive water when cleaning.

Keep cord and plug off the ground and away from moisture.

Always unplug the equipment before cleaning or servicing.

Your electrician must furnish sufficient power for proper machine operation. We recommend this floss machine be on a dedicated and protected circuit. Failure to wire properly will void the warranty and may result in damage to the machine. It is Gold Medal Products Company's recommendation that this machine be plugged directly into a wall outlet. The use of extension cords is not recommended due to safety concerns, and may cause sacrificed and/or reduced performance.

Before You Plug In Machine

1. Make sure all machine switches are in the OFF position before plugging the equipment into the receptacle.
2. Make sure the wall outlet can accept the grounded plugs (where applicable) on the power supply cord.
3. The wall outlet must have the proper polarity. If in doubt, have a competent electrician inspect the outlet and correct if necessary.
4. **DO NOT** use a grounded to un-grounded receptacle adapter.
5. Install the unit in a level position.

INSTALLATION OF FLOSS STABILIZER

Place Floss Machine Pan on unit and install Whirl Grip Floss Stabilizer as shown below.

1) Place a Non-Metallic Whirl Clip over the rim of the Floss Pan. The out facing hooks go to the inside of the Floss Pan.
2) Hang the Non-Metallic screening material onto the up facing hook with the screening approximately flush with the top of the pan. Gently pull the screening down and attach to the down facing hook on the clip to secure screen in place.
3) Check the clip spacing and the air space required between the pan and the stabilizer for proper operation.
4) Continue this process with all clips, keeping equal spacing around the pan.

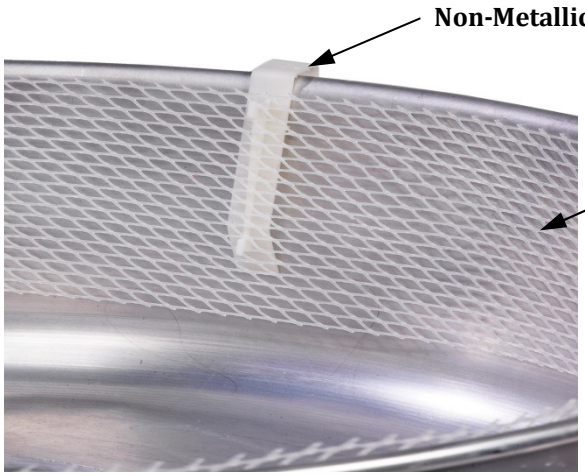

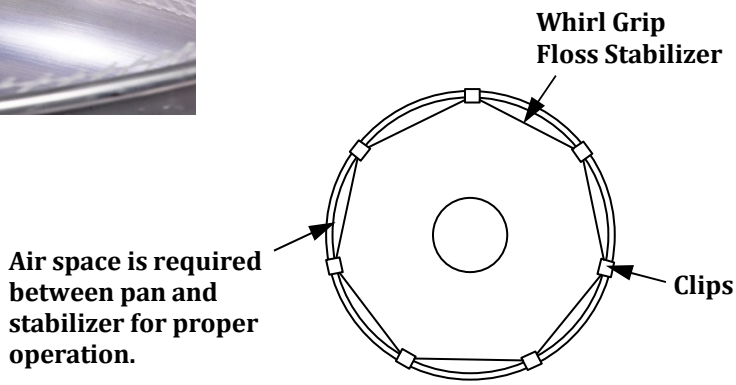

Top View of Pan

OPERATING INSTRUCTIONS

Controls and Their Functions

MAIN SWITCH

Turns motor “on” or “off” and supplies voltage to the heat switch.

HEAT SWITCH

Turns voltage to the heating element (ribbon) “on” or “off”.

HEAT CONTROL KNOB

Increases or decreases voltage to heating element (ribbon) using a graduated dial.

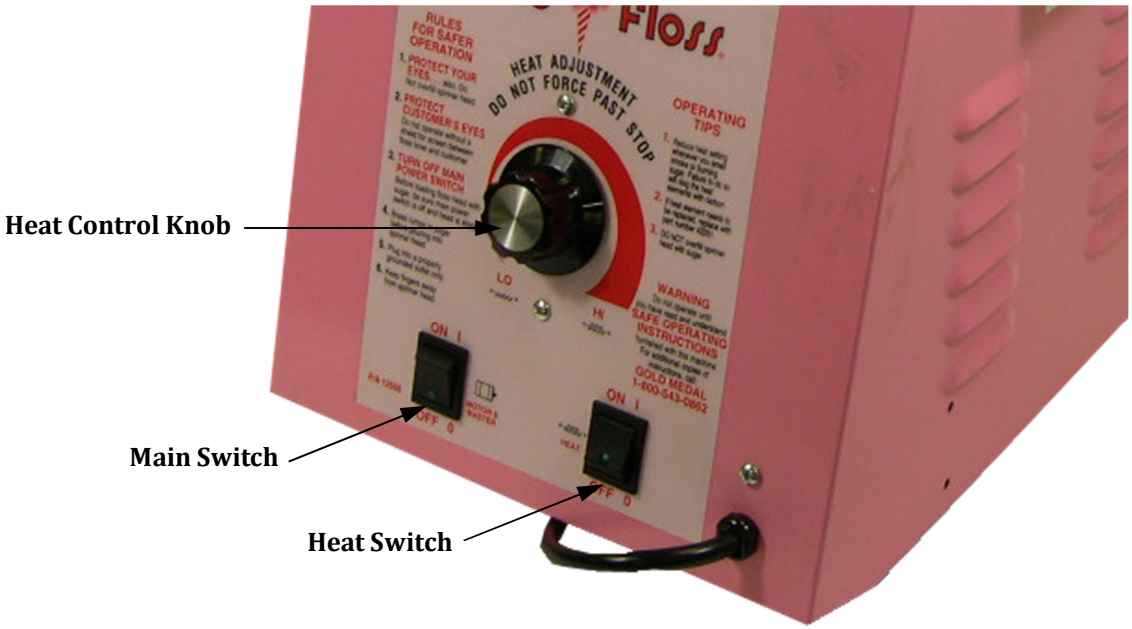

Sugar for Your Candy

Ready to Use Flosssugar

Our ready to use Flossugar is the preferred sugar for your new cotton candy machine; however 100% pure cane or beet sugar will do just fine. Our Flossugar gives you good rich colors, and great flavors, too. It is packed in handy half-gallon sealed cartons, with an E-Z pour spout for filling your machine. Flossugar comes in many flavors, and you can easily change flavors for greatest variety, and best sales.

Mix Your Own

If you want to mix your own use our Flossine, please follow our directions. If you want a deeper color slightly dampen the mixed sugar. Use a tablespoon of water per five pounds of sugar, sprinkle water over sugar, and mix well. **DO NOT USE EXCESS COLOR!** Too much color will ruin the ribbons on your machine and could create a bitter taste to the candy. There is a limit as to how dark you can make cotton candy. That's because cotton candy is 98% air, and we cannot color the air.

Sugar Considerations

Today 99% of the sugar manufactured is extra fine granulated, which does have some small particles which can slip thru the ribbons without being melted. If this becomes objectionable, you can seek out medium coarse or sanding sugars. The larger crystal size will require a little more heat to melt.

Today we see some free flowing sugars for restaurants. Free flowing sugars contain cornstarch which will burn onto your ribbons clogging them rapidly. We have also seen some off-brand sugars that are a blend of sugar and dextrose or corn syrup. This product makes very poor cotton candy. Please make sure you get good sugar for your cotton candy machine.

HEAT CONTROL SETTINGS TEST

Settings Test

⚠ CAUTION

Floss head operates at high speeds. Operator MUST keep hands and face clear of the floss head to avoid possible injury. Keep all spectators at a reasonable distance, and use a Floss Bubble for added customer protection.

1. Follow the guidelines described on page 4 for supplying power to machine.
2. With main switch still off, fill floss head. Always fill it 90% full with sugar. This 90% level is necessary to obtain a balanced condition in the floss head. **DO NOT OVERFILL!** Excessive vibration will occur if overfilled. Before turning the power on, manually turn the head to balance out the sugar. This will eliminate excessive vibration of the head.

   Important: NEVER add sugar when motor is running.
3. Turn the Main Switch and Heat Switch “ON”.
4. Turn the Heat Control Knob clockwise to maximum setting to initiate the fastest possible warm up.
5. The machine should start making floss in a few seconds. When the unit starts making floss, you must reduce the heat setting. Turn the Heat Control Knob counter clockwise to eliminate smoking. If you operate the unit at "startup" setting, you will carbonize the ribbon.

⚠ CAUTION

Never operate the equipment for a prolonged period of time with the HEAT CONTROL in a position that causes the sugar to smoke. This will result in excessive carbonization of the ribbon (heat element). If you smell burning sugar or see smoke, reduce the heat.

6. Once you find the ideal setting for the HEAT CONTROL, operate with the setting near this position each time.

MAKING FLOSS

Pick a cone, if it sticks in the stack of cones, twist it off the stack.

⚠	**⚠ CAUTION** Keep hands away from spinning head!

Hold an inch or two of the pointed end of the cone between two fingers and a thumb. With a light flicking action, roll cone in the web of floss building up in the pan. Lift the cone up with the ring of floss attached and rotate the cone to wrap the floss**. DO NOT** roll floss while the cone is inside the pan. This will pack the floss too tightly. See steps 1 thru 8 shown below.

If the floss fails to stick to the cone, pass the cone near the spinner head to pick up a “starter” of melted sugar. Lift the cone out of the pan and wrap the floss with a "figure eight" movement of the hand. This leaves giant pockets and makes the final product appear larger. Make sure room humidity is not too high, or product will be "heavy".

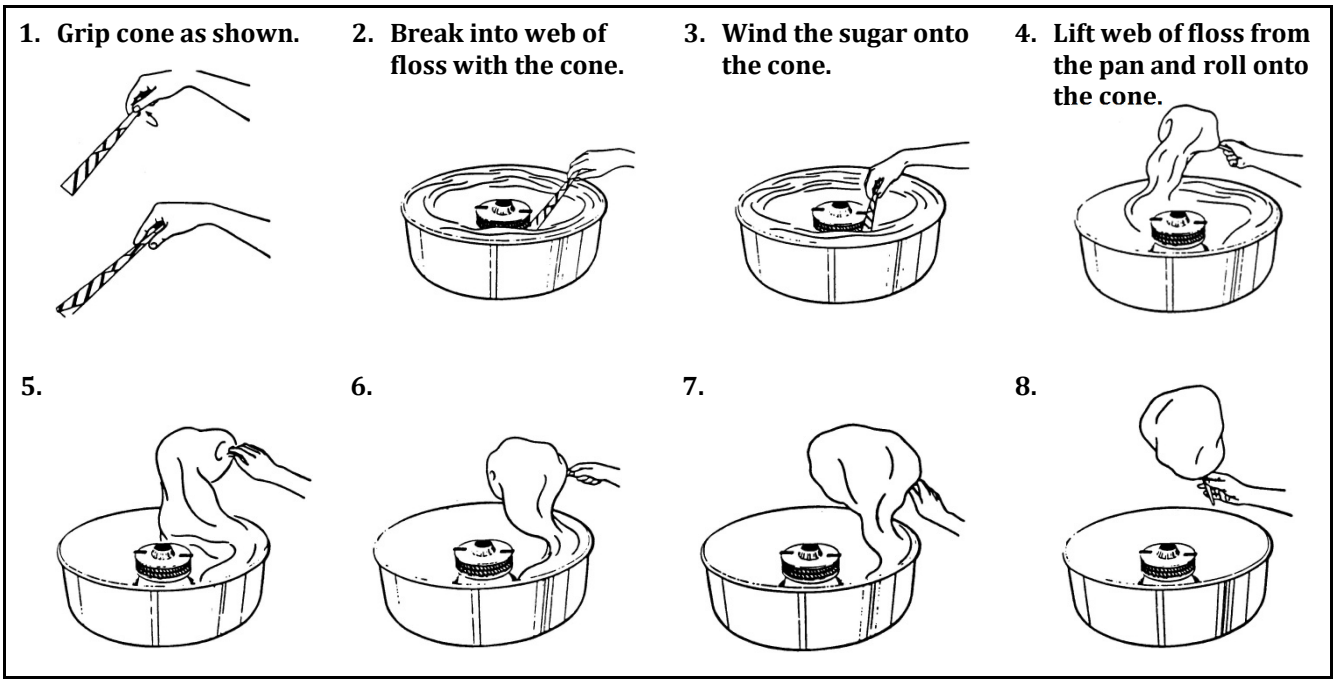

- **DO NOT PUT HANDS OR OBJECTS IN ROTATING SPINNER HEAD.**
- **DO NOT FILL SPINNER HEAD WITH SUGAR WHILE IT IS ROTATING.**
- **WEAR EYE PROTECTION.**
- **DO NOT PUT HANDS NEAR ROTATING SPINNER HEAD.**
- **USE FLOSS CONE TO COLLECT COTTON CANDY.**

FLOATER ADJUSTMENTS

In operation, the floss will collect on the FLOSS STABILIZER. If the floss collects "low" on the stabilizer, twist the front (leading) edge of the leather floaters down. You get more lift and the floss will collect higher.

Form leather floaters as shown below. This creates a lifting action to float the floss higher on the outside wall of the floss pan.

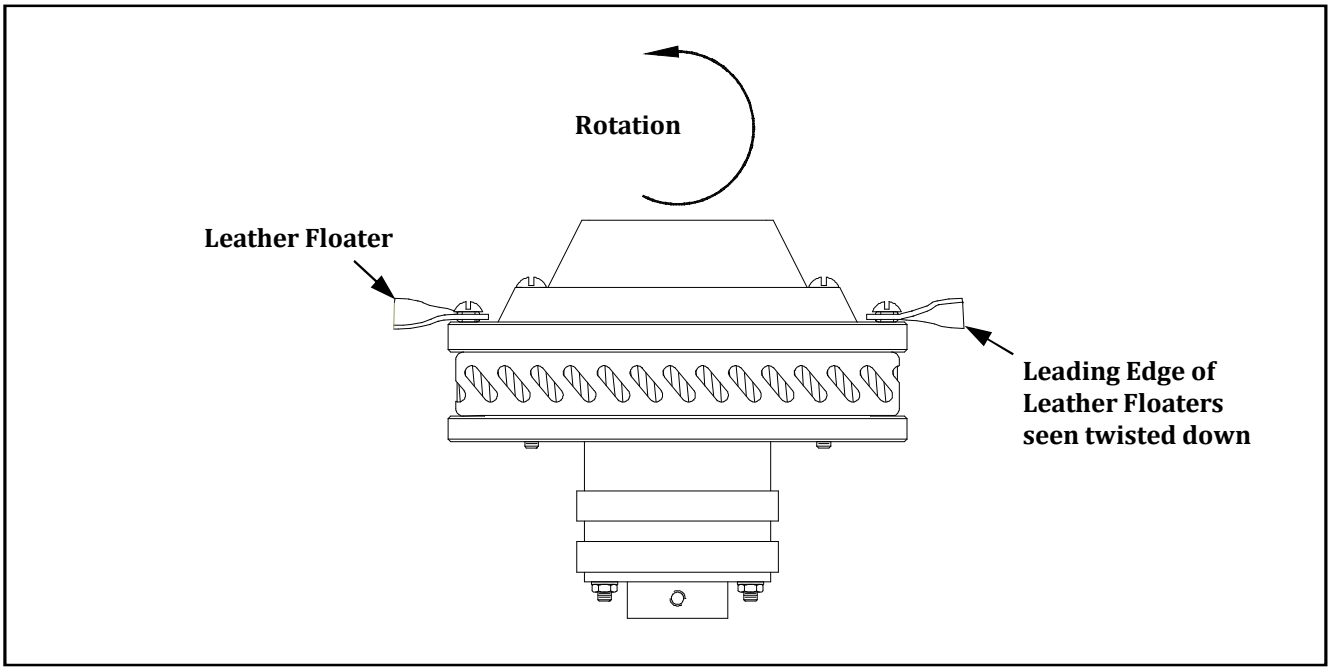

Shut Down Procedure

When completing operation for the day (or any prolonged period), run all the sugar out of the floss head. When empty, turn the heat to highest position for approximately one minute to "clean" the band by baking off remaining sugar. **NEVER** put water in the floss head.

Cleaning Instructions

Unplug the machine and wait for the floss head to cool down to room temperature. Wipe all surfaces with a clean, damp cloth.

FLOSS BANDS AND RIBBONS

The Gold Medal Floss machine is equipped with a patent pending FLOSS BAND designed to give long life, trouble-free service with little care. **DO NOT** scratch the band. To clean, unplug the machine and wipe with a damp cloth.

Gold Medal Floss Ribbons (heat elements) are made of nickel wire with insulation at the terminal point and on the lead wires. They are designed to be as reliable as the Gold Medal Floss Bands; however, the ribbons must be handled carefully. **DO NOT** stretch the ribbon or it will not function properly.

Disassembly and Removal of Floss Bands

1. Remove all sugar from the head of the machine before disassembling. If the unit is inoperative, carefully turn the machine on its side and shake the sugar out.
2. Remove the four spinner cap retainer screws and spinner cap. In some cases, the sugar has caused the cap and band to stick together. Applying gentle pressure with the heel of the hand should free the parts for removal.
3. Remove the element lead wire retaining screws with a ¼" (9.5mm) nut driver and remove the element lead wires from the terminals in the floss head. This will allow the band and ribbons to be removed.
4. Remove the band and ribbons. If there is excessive sugar buildup, soak the band and ribbons in hot water until the sugar dissolves. When the sugar has been removed, tap the band in the palm of your hand to loosen the ribbons for removal.
5. Inspect, then clean or replace band and ribbons. The primary reason for ribbon replacement is carbon build up inside the ribbon wire from which the heating element is manufactured. If the ribbon is being cleaned only, an additional hot water soak may help remove some of the carbon buildup.

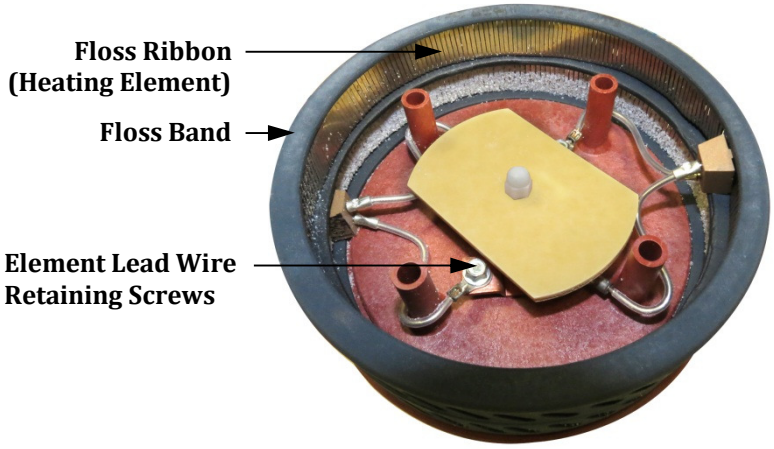

TROUBLESHOOTING

Low Production

- Check for excessive carbon on the ribbons. Follow the instructions for removing and cleaning band and ribbon if needed.
- Check heat control for correct setting.
- Check the line voltage. A primary reason for low production and poor equipment performance is low line voltage. Have an electrician check the line voltage and add new lines for all of the various equipment you have plugged into the electric circuit if there is not enough current for the requirement listed on the equipment nameplate.
- Check the ribbons. For machines with two ribbons, one burned out or shorted ribbon will cut production in half.
- Foreign objects in the head assembly may short out a ribbon or cause an out-of-balance condition.

Excessive Smoke

- Check heat control setting. After warm up, equipment should make good floss at a reduced setting. Never let the machine operate with the heat so high it produces smoke or if you can smell burned sugar. This condition quickly fills the ribbon with carbonized sugar.
- Check the product mixture being used. For best results, use nothing with a cornstarch base.
- Check the band and ribbon for excessive sugar build up and remove if needed as described on page 11 of this manual.

Excessive Vibration

- If the equipment is new, verify that shipping bolts have been loosened and packing materials were removed from the machine.
- When adding sugar to the floss head, always fill it 90% full to obtain a balanced condition in the head and eliminate vibration. **DO NOT** add sugar with motor running!
- Check for stretched or uneven suspension springs.
- Run the sugar completely out, then check for foreign objects or sugar lumps in the head assembly.

MAINTENANCE INSTRUCTION

⚠ DANGER

Improper installation, adjustment, alteration, service, or maintenance can cause property damage, injury or death. Read the installation, Operating, and Maintenance Instructions thoroughly before installing or servicing this equipment.

⚠ DANGER

Do Not immerse the equipment in water. Unplug your machine before servicing.

⚠ WARNING

Adequate eye protection must be used when servicing this equipment to prevent eye injury.

⚠ CAUTION

THE FOLLOWING SECTIONS OF THIS MANUAL ARE INTENDED ONLY FOR QUALIFIED SERVICE PERSONNEL WHO ARE FAMILIAR WITH ELECTRICAL EQUIPMENT. THESE ARE NOT INTENDED FOR THE OPERATOR.

ORDERING SPARE PARTS

1. Identify the needed part by checking it against the photos, illustrations, and/or parts list.
2. When ordering, please include part number, part name, and quantity needed.
3. Please include your model number, serial number, and date of manufacture (located on the machine nameplate) with your order.
4. Address all parts orders to:

Parts Department
Gold Medal Products Co.
10700 Medallion Drive
Cincinnati, Ohio 45241-4807

Or, place orders by phone or online:

Phone: (800) 543-0862
(513) 769-7676
Fax: (800) 542-1496
(513) 769-8500
E-mail: info@gmpopcorn.com
Web Page: www.gmpopcorn.com

Floss Machine Exterior View

Parts List - Floss Machine Exterior View

Item	Part Description	Qty.	Part Number	
			3024	3024EX
1	SPINNER HEAD COMPLETE 5IN	1	42283	42283EX
2	INSP.COVER,FOUR BRUSH	2	42381	42381
3	8-32 X 1/2 SLOTTED H W H	4	49379	49379
4	BELL HOUSING, DUAL BRUSH	1	42190	42190
5	ACORN NUT 1/4-20	3	49068	49068
6	NAMEPLATE	1	12602	42594
7	KNOB, HEAT CONTROL	1	42556	
	KNOB, PAKTRONIC CONTROL	1		40793
8	STRAIN RELIEF #SR-6P3-4	1	76026	
	IEC RECEPTACLE C14	1		55511
9	LEAD-IN CORD 15 AMP PLUG	1	22038	
	POWER CORD IEC SCHUKO	1		42372
10	SWITCH, LIGHTED ROCKER GR	2	42798	42798
11	BOTTOM PLATE NS	1	42448	42448
12	RUBBER FEET 3/4IN HIGH	8	47155	47155
13	HANDLE	2	67069	67069
14	KNOB SHIPPING BRACKET	2	42150	42150
15	SHIPPING BRACKET ASSY	1	69839	69839
16	BRUSH HOLDER ASSY (Includes Brushes, Caps, Holders)	2	42382W	42383W
17	CAP, BRUSH HOLDER	4	42138	42138
18	CARBON BRUSH	4	55007	55007
19	DUAL BRUSH HOLDER W/LEADS	2	42436W	42384W

Floss Pan and Whirlgrip Stabilizer

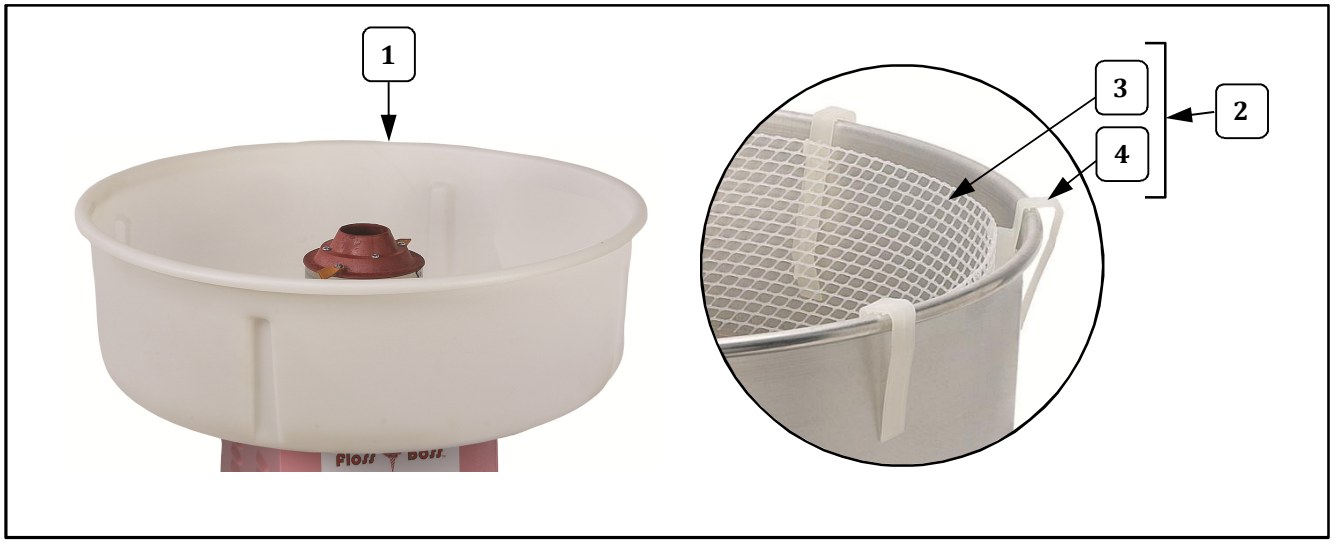

Item	Part Description	Qty.	Part Number	
			3024	3024EX
1	FLOSS PAN	1	42040NMR	42040NMR
2	WHIRLGRIP STABILIZER (Includes Floss Stabilizer and Clips)	1	3010NM	3010NM
3	FLOSS STABILIZER (Web)	1	43032NM	43032NM
4	WHIRLGRIP CLIPS	5	77470	77470

Cabinet Interior – Model No. 3024

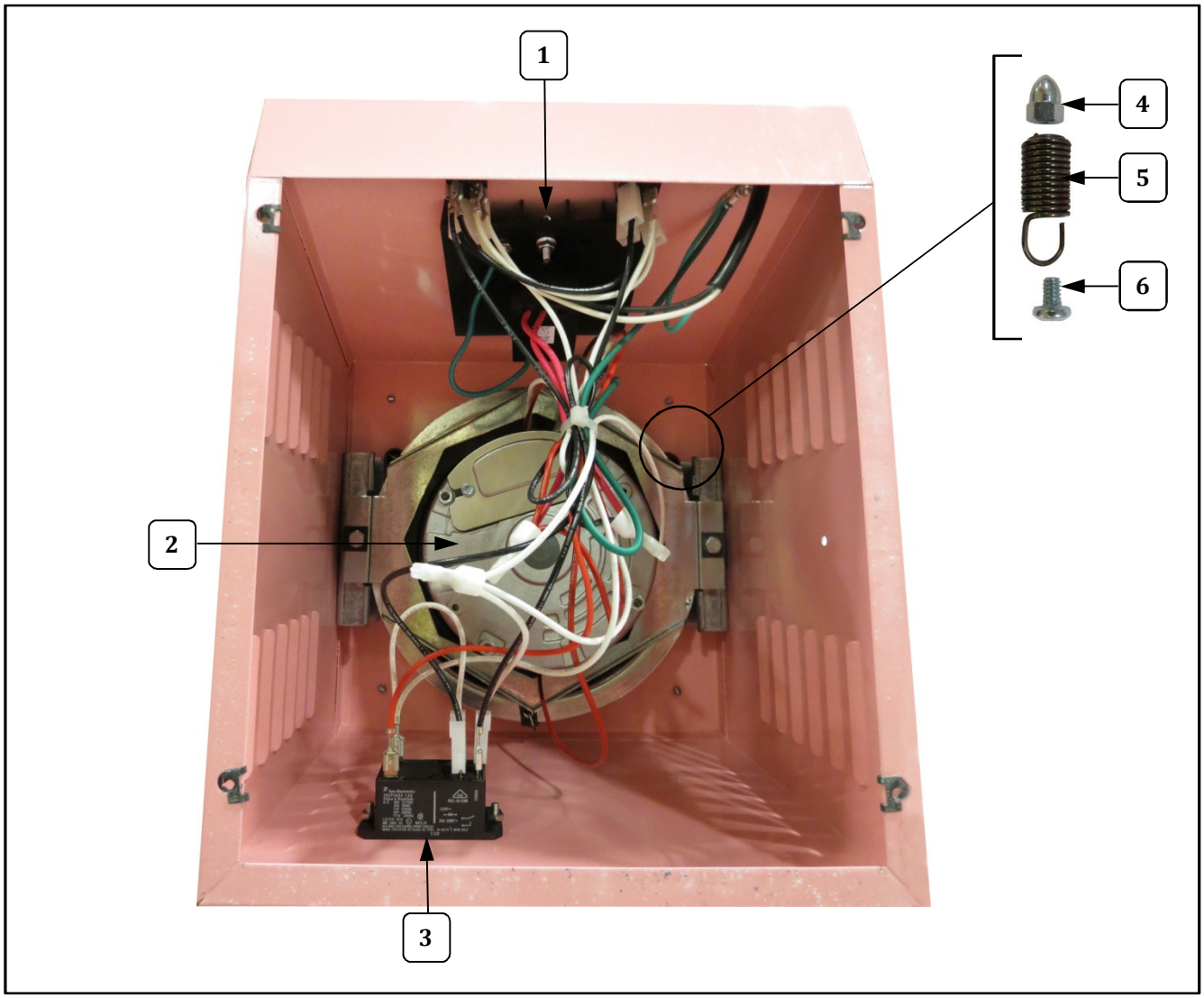

Item	Part Description	Qty.	Part No. 3024
1	ELECTRONIC HEAT CONTROL	1	42558
2	MOTOR, FLOSS MACHINE	1	48649
3	RELAY, 120 VAC, DPST-NO	1	48590
4	ACORN NUT 1/4-20	3	49068
5	SPRING, SUSPENSION MEDIUM	3	42524
6	SCREW 1/4-20X3/8 PN HD PH	3	42360

Cabinet Interior – Model No. 3024EX

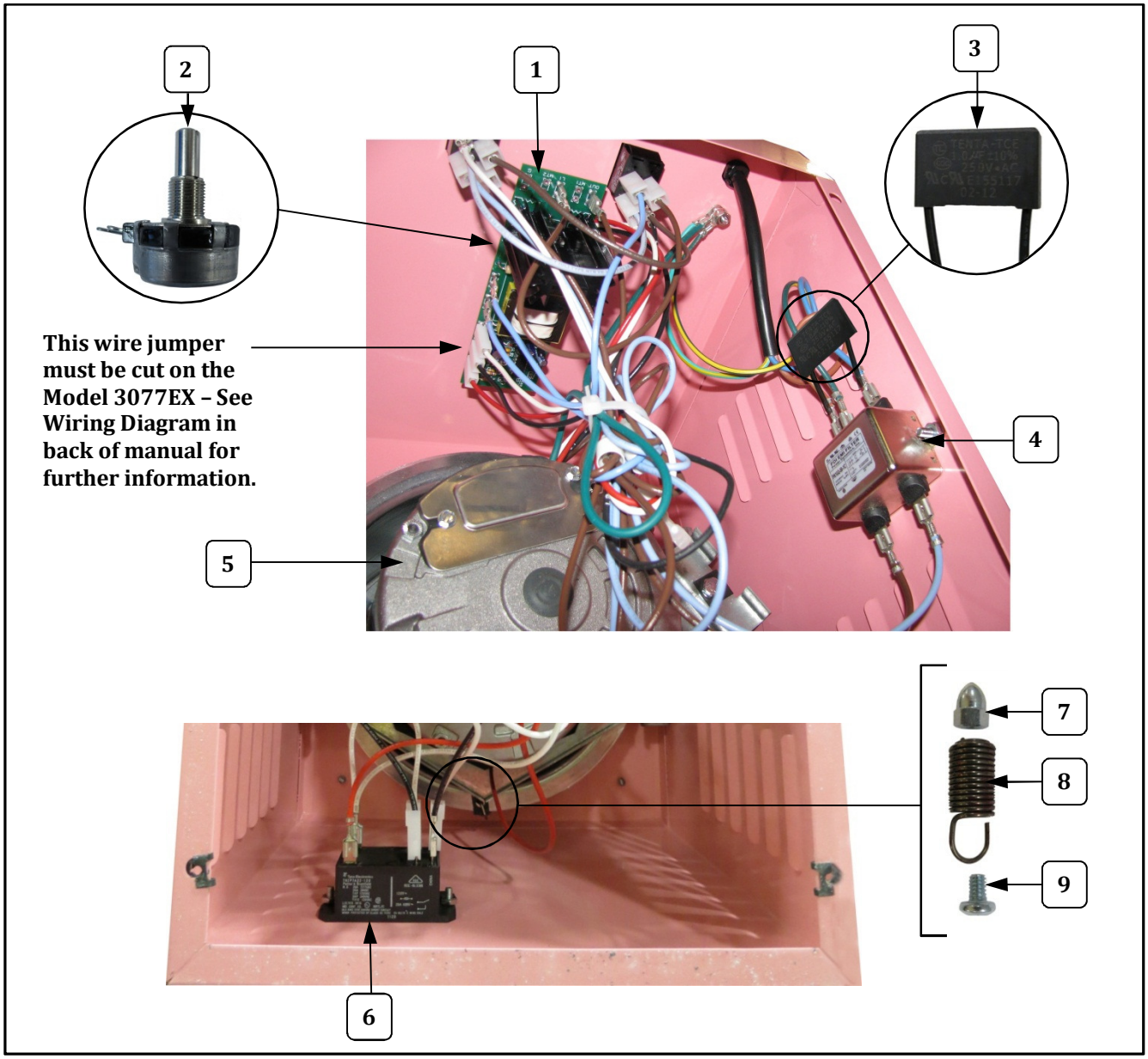

Item	Part Description	Qty.	Part No. 3024EX
1	HEAT CONTROL, FLOSS 240V	1	55260
2	1000 OHM POT ASSY (Knob attaches to it)	1	55332
3	1UF 250VAC CAPACITOR	1	55515
4	FILTER EMI 10 AMP	1	13302
5	MOTOR, FLOSS MACHINE	1	48649EX
6	RELAY, 240 VAC, DPST NO	1	48590EX
7	ACORN NUT 1/4-20	3	49068
8	SPRING, SUSPENSION MEDIUM	3	42524
9	SCREW 1/4-20X3/8 PN HD PH	3	42360

Floss Machine Head Assembly

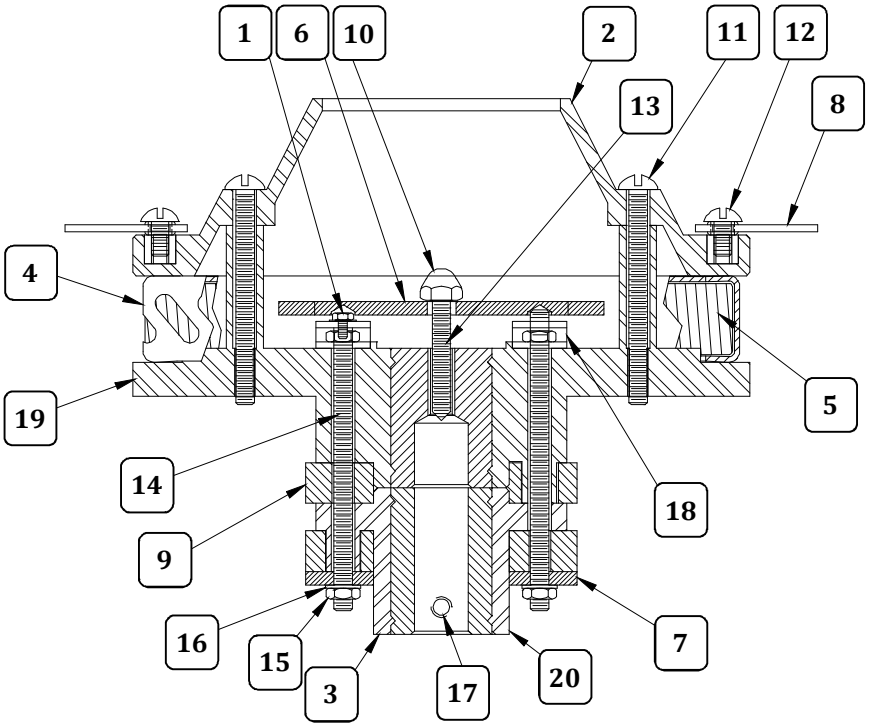

Item	Part Description	Qty.	Part Number	
			3024	3024EX
	SPINNER HEAD COMPLETE	1	42283	42283EX
1	8-32 x 1/4 HX HD WHIZLOCK	2	42045	42045
2	HIGH CAPACITY SPINNER CAP	1	43166	43166
3	SPINNER HEAD BOTTOM ONLY	1	42284	42284
4	5 1/2" FLOSS BAND	1	43165	43165
5	5 IN RIBBON ASSY 11 OHMS	1	42251	
	5 IN RIBBON ASSY 130V	1		42370
6	PHENOLIC TERMINAL GUARD	1	42162	42162
7	BOTTOM PHENOLIC WASHER	1	20054	20054
8	LEATHER FLOATER	2	20010	20010
9	SLIP RING 3/8 IN	2	42126	42126
10	ACORN NUT NYLON 1/4-20	1	48041	48041
11	10-24 X 2 PHIL PAN M/S	4	42041	42041
12	SCREW 8-32X5/8 PH PAN MS	2	42192	42192
13	SET SCREW 1/4-20 X 2	1	42311	42311
14	SLIP RING STUDS	2	42127	42127
15	HEX NUT 10-32 ZINC PLATED	2	74143	74143
16	#10 INTERNAL TOOTH WASHER	2	12573	12573
17	SET SCREW 1/4-20 X 3/8	1	74125	74125
18	TERMINAL ASSEMBLY	2	42305	42305
19	UPPER SPINNER HEAD	1	42437	42437
20	LOWER SPINNER HEAD 1/2	1	42281	42281

WIRING DIAGRAMS

Model No. 3024

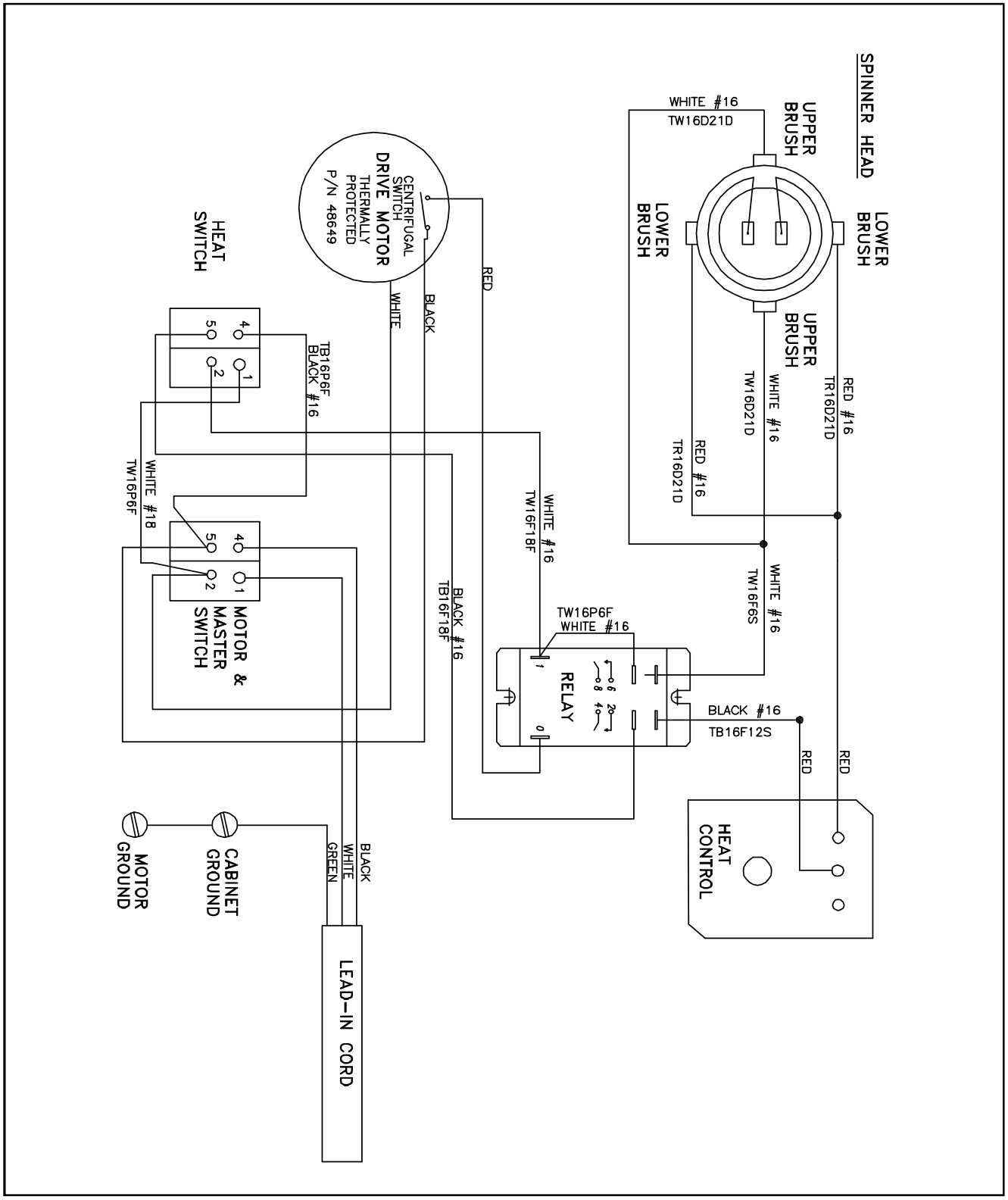

Model No. 3024EX

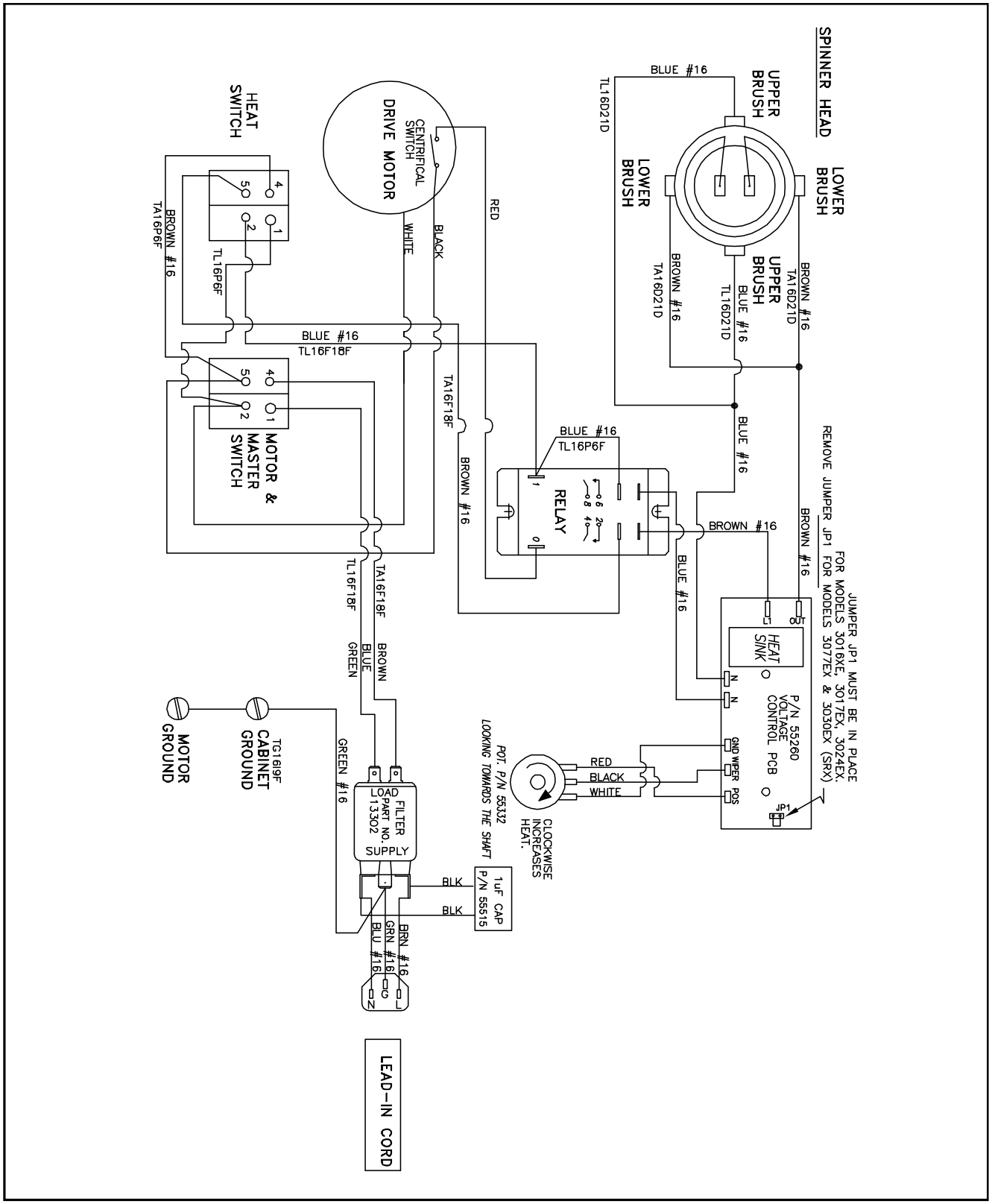

WARRANTY

WE WARRANT to the original purchaser the Gold Medal equipment sold by us to be free from defects in material or workmanship under normal use and service. Our obligation under this warranty shall be limited to the repair or replacement of any defective part for a period of six (6) months from the date of sale to the Original Purchaser with regard to labor and two (2) years with regard to parts and does not cover damage to the equipment caused by accident, alteration, improper use, voltage, abuse, or failure to follow instructions.

THIS WARRANTY IS IN LIEU OF ALL OTHER WARRANTIES EXPRESSED OR IMPLIED, AND OF ALL OTHER OBLIGATIONS OR LIABILITIES ON OUR PART, INCLUDING THE IMPLIED WARRANTY OF MERCHANTIBILITY. THERE ARE NO WARRANTIES WHICH EXTEND BEYOND THE DESCRIPTION ON THE FACE HEREOF. We neither assume, nor authorize any other person to assume for us, any other obligation or liability in connection with the sale of said GOLD MEDAL equipment or any part thereof.

The term “Original Purchaser” as used in this warranty shall be deemed to mean that person, firm, association, or corporation who was billed by the GOLD MEDAL PRODUCTS COMPANY, or their authorized distributor for the equipment.

THIS WARRANTY HAS NO EFFECT AND IS VOID UNLESS THE ORIGINAL PURCHASER FIRST CALLS GOLD MEDAL PRODUCTS COMPANY AT 1-800-543-0862 TO DISCUSS WITH OUR SERVICE REPRESENTATIVE THE EQUIPMENT PROBLEM, AND, IF NECESSARY, FOR INSTRUCTIONS CONCERNING THE REPAIR OR REPLACEMENT OF PARTS.

NOTE: This equipment is manufactured and sold for commercial use only.

GOLD MEDAL® PRODUCTS CO.

10700 Medallion Drive, Cincinnati, Ohio 45241-4807 USA

www.gmpopcorn.com

Phone: (800) 543-0862
(513) 769-7676
Fax: (800) 542-1496
(513) 769-8500