GOLD MEDAL® PRODUCTS CO.

36" Updraft - Elite Series PopClean®

Model No. 2911 (52 oz Medallion UD)

Specifications

General image shown for reference.

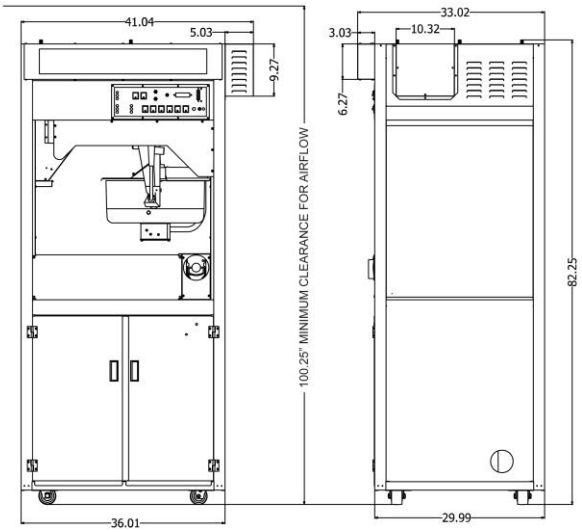

A minimum 18" clearance is required between any opening or exhaust duct and a combustible surface, per NFPA 96 Version 2017.

Overall Dimensions:

Width: 41" (36" cabinet; 5" blower)
Depth: 33" (30" cabinet; 3" sign)
Height: 82.25"

(See drawing above for additional dimensions.) Per NFPA 96 Version 2017, allow 18" min. clearance above exhaust.

Electrical - Domestic

120/208 OR 120/240V
8270 WATTS 60 Hz
(NEMA 14-50P) Plug

Unit designed to operate on single phase, 50 AMP, 4 wire supply (2 Hot, 1 Neutral, 1 Ground). Wall receptacle supplied with unit.

Plug Type:

NEMA 14-50P

Agency Approvals:

Intertek Intertek

Filter/Ventilation Specifications:

- Tested and approved to ANSI/UL 710B (Integrated Recirculating Ventilation System/Ductless Hood).
- Meets EPA-202 Standards for clean air of less than 5 mg of particulates. Updraft Models tested to 3.6 mg particulates. (Downdraft tested to 1 mg particulates.)
- Updraft Model - Exhausts through replaceable HEPA grade filters, and vents out top of unit.

Features:

- 52 oz. Stainless Steel, Top Hat Kettle.
- Ansul R-102 Fire Suppression System (required); system must be charged and activated by an Ansul Certified Representative.
- Improved Big Eye Controller.
- Oil Level Display.
- Temperature/Batch Counter Display.
- Salt-Sweet, Flexi-Pop.
- All stainless steel construction.
- All LED lighting of cabinet and signs.
- Reversible LED or LED Neon Sign from Front Counter (customer side) to Back Counter (operator side).

Options: Deep Well, Pass-Thru

Oil Delivery System: Unit supplied with Model 2114-00-010 Bucket Pump System or 2257-00-010 Bag-In-A-Box System.

Gold Medal Products Co.
10700 Medallion Drive, Cincinnati, OH 45241

Ph: (513) 769-7676, (800) 543-0862; Fax: (513) 769-8500
gmpopcorn.com info@gmpopcorn.com

© 2018 - The text, descriptions, graphics, and other material in this publication are the proprietary and exclusive property of Gold Medal Products Co. and shall not be used, copied, reproduced, reprinted, or published in any fashion, including website display, without its express written consent. Contact Gold Medal for most current information.

AUTHORIZATION TO MARK

This authorizes the application of the Certification Mark(s) shown below to the models described in the Product(s) Covered section when made in accordance with the conditions set forth in the Certification Agreement and Listing Report. This authorization also applies to multiple listee model(s) identified on the correlation page of the Listing Report.

This document is the property of Intertek Testing Services and is not transferable. The certification mark(s) may be applied only at the location of the Party Authorized To Apply Mark.

Applicant:	Gold Medal Products Company	**Manufacturer:**	**Gold Medal Products Company**
Address:	10700 Medallion Drive Cincinnati OH 45241	**Address:**	10700 Medallion Drive Cincinnati OH 45241
Country:	U.S.A.	**Country:**	U.S.A.
Contact:	Steve Snyder / Timothy Rhome	**Contact:**	Steve Snyder / Timothy Rhome
Phone:	(513) 769-7676	**Phone:**	(513) 769-7676
FAX:	(513) 769-8500 / (513) 769-8811	**FAX:**	(513) 769-8500 / (513) 769-8811
Email:	snyder@gmpopcorn.com / trhome@gmpopcorn.com	**Email:**	snyder@gmpopcorn.com / trhome@gmpopcorn.com

Party Authorized To Apply Mark: Same as Manufacturer
Report Issuing Office: Lake Forest, Ca

Control Number: *3102942* **Authorized by:** Steven Condie

for William T. Starr, Certification Manager

This document supersedes all previous Authorizations to Mark for the noted Report Number.

This Authorization to Mark is for the exclusive use of Intertek's Client and is provided pursuant to the Certification agreement between Intertek and its Client. Intertek's responsibility and liability are limited to the terms and conditions of the agreement. Intertek assumes no liability to any party, other than to the Client in accordance with the agreement, for any loss, expense or damage occasioned by the use of this Authorization to Mark. Only the Client is authorized to permit copying or distribution of this Authorization to Mark and then only in its entirety. Use of Intertek's Certification mark is restricted to the conditions laid out in the agreement and in this Authorization to Mark. Any further use of the Intertek name for the sale or advertisement of the tested material, product or service must first be approved in writing by Intertek. Initial Factory Assessments and Follow up Services are for the purpose of assuring appropriate usage of the Certification mark in accordance with the agreement, they are not for the purposes of production quality control and do not relieve the Client of their obligations in this respect.

Intertek Testing Services NA Inc.
165 Main Street, Cortland, NY 13045
Telephone 800-345-3851 or 607-753-6711 Fax 607-756-6699

Standard(s):	UL 710B Standard for Safety for Recirculating Systems, First Edition, Revised June 29, 2010; NFPA 96, Standard for Ventilation Control and Fire Protection of Commercial Cooking Operations, 2008 Edition; ANSI/UL 197 Standard for Safety for Commercial Cooking Appliances, 10th Edition, March 17, 2010, Revised June 24, 2011. CAN/CSA-C22.2 No. 109-M1981 Standard for Commercial Cooking Appliances; General Instruction No 1 – 3, Second Edition, dated June 1, 1981 (r2004)
Product:	Popcorn Machine
Models:	The base models for the Pop Clean Poppers are: 2011, 2670, 2671, 2848, 2860, 2872, 2873, 2875, 2911, 2948, 2960, 2972, 2973, 2975

Intertek

<- Back

Product Description

Title: RECIRCULATING SYSTEMS

Company: GOLD MEDAL PRODUCTS CO. - Cincinnati, OH USA

Product Information: Trade Name(s): Pop Clean Popper.

Popcorn Machine, Model Nos. 2011, 2848, 2872, 2875, 2911, 2948, 2972, 2975 may be followed by suffix CED; may be followed by N; may be followed by P; followed by L, R; may be followed by S; may be followed by Z, F, B, N. Model Nos. 2011, 2848, 2860, 2861, 2872, 2873, 2911, 2948, 2960, 2972, 2973 may be followed by N; may be followed by P; followed by L, R; may be followed by S; may be followed by E, D, Z, F, B, N; may be followed by -001 to -999. Model Nos. 2011, 2670, 2671, 2848, 2860, 2872, 2873, 2875, 2911, 2948, 2960, 2972, 2973, 2975.

Evaluated to the following: A representative sample of the listed devices have been tested, investigated and found to comply with the requirements of the Standard(s) for Recirculating Systems (UL-710B) and are identified with the ETL Listed Mark.

<- Back

Contact Us

Americas+1-888-347-5478
(or +1-312-906-7801)
Email
dirlist@intertek.com

Intertek Home
Product Directories

Inspector Center

Get up-to-date information on everything from our Accreditations to our Certifications and Marks. Learn more...

News

Intertek Unveils New Design for Product Safety and Quality Certification Marks. Learn more...

© 2010 Intertek All Rights Reserved.
All other product or service names are the property of their respective owners.

Intertek

<- Back

Product Description

Title:	VENTILATION CONTROL & FIRE PROTECTION OF COMMERCIAL COOKING OPERATIONS
Company:	GOLD MEDAL PRODUCTS CO. - Cincinnati, OH USA
Product Information:	Trade Name(s): Pop Clean Popper. Model Nos. 2011, 2670, 2671, 2848, 2860, 2872, 2873, 2875, 2911, 2948, 2960, 2972, 2973, 2975.
Evaluated to the following:	A representative sample of the listed devices have been tested, investigated and found to comply with the requirements of the Standard(s) for Ventilation Control and Fire Protection of Commercial Cooking Operations (NFPA-96) and are identified with the ETL Listed Mark.

<- Back

Contact Us

Americas+1-888-347-5478
(or +1-312-906-7801)
Email
dirlist@intertek.com

Intertek Home
Product Directories

Inspector Center

Get up-to-date information on everything from our Accreditations to our Certifications and Marks. Learn more...

News

Intertek Unveils New Design for Product Safety and Quality Certification Marks. Learn more...

© 2010 Intertek All Rights Reserved.
All other product or service names are the property of their respective owners.

Intertek

<- Back

Product Description

Title: COMMERCIAL ELECTRIC COOKING APPLIANCES

Company: GOLD MEDAL PRODUCTS CO. - Cincinnati, OH USA

Product Information: Trade Name(s): Pop Clean Popper, Pop Corn Popper.

Popcorn Machine, Model Nos. 2011, 2848, 2872, 2875, 2911, 2948, 2972, 2975 may be followed by suffix CED; may be followed by N; may be followed by P; followed by L, R; may be followed by S; may be followed by Z, F, B, N. Model Nos. 2011, 2670, 2671, 2848, 2860, 2861, 2872, 2873, 2911, 2948, 2960, 2972, 2973 may be followed by N; may be followed by P; followed by L, R; may be followed by S; may be followed by E, D, Z, F, B, N; may be followed by -001 to -999. Model Nos. 2011, 2670, 2671, 2848, 2860, 2872, 2873, 2875, 2911, 2948, 2960, 2972, 2973, 2975. Models 2861, 2873, 2973 are equipped with twin kettles. Also Tested To: CSA T.I.L. C-41.

Evaluated to the following: A representative sample of the listed devices have been tested, investigated and found to comply with the requirements of the Standard(s) for Commercial Electric Cooking Appliances (UL-197) and are identified with the ETL Listed Mark.

<- Back

Contact Us

Americas+1-888-347-5478
(or +1-312-906-7801)
Email
dirlist@intertek.com

Intertek Home
Product Directories

Inspector Center

Get up-to-date information on everything from our Accreditations to our Certifications and Marks. Learn more...

News

Intertek Unveils New Design for Product Safety and Quality Certification Marks. Learn more...

© 2010 Intertek All Rights Reserved.
All other product or service names are the property of their respective owners.