Part No. 46147
Revised April 2005

CORN TREAT , COMBO KANDY KING, AND PRALINATOR

Instruction Manual

Model #2174EL/ER & 2175EL/ER
Model #2183EL/ER & 2182EL/ER
Model #2180EL/ER & 2181EL/ER

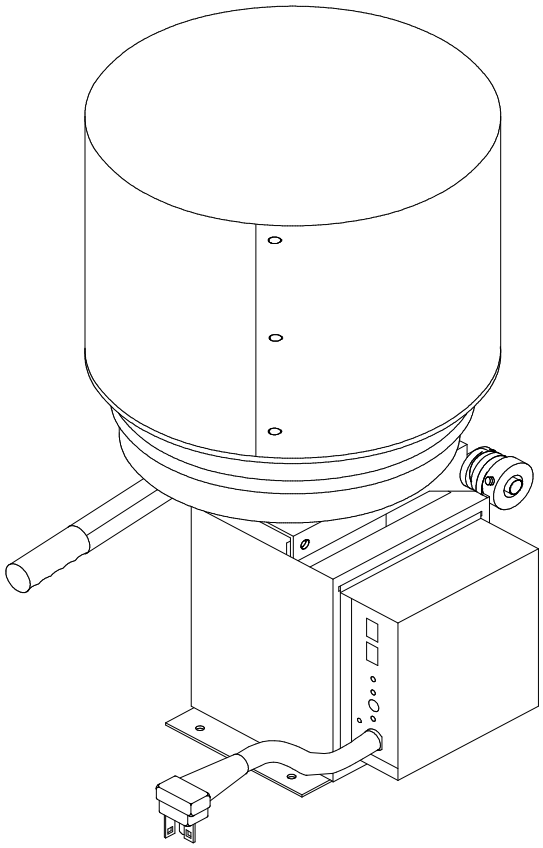

GOLD MEDAL®
FUNFOOD EQUIPMENT & SUPPLIES
Cincinnati, OH 45241-4807 USA

SAFETY PRECAUTIONS

⚠ DANGER

Machine MUST be properly grounded to prevent electrical shock to personnel. Failure to do so could result in serious injury, or death. Do NOT immerse the kettle, warmer, or any other part of this equipment in water. Always unplug the equipment before cleaning or servicing. Do not use excessive water when cleaning.

⚠ WARNING

To avoid serious burns, do NOT touch the kettle while it is hot.

⚠ WARNING

ALWAYS wear safety glasses when servicing this equipment.

⚠ WARNING

Any alterations to this equipment will void the warranty and may cause a dangerous situation. NEVER make alterations to the equipment. Make sure all machine switches are in the off position before plugging the equipment into the receptacle.

⚠ CAUTION

Do NOT allow direct contact with this equipment and the general public when used in food service locations. Only personnel that are trained and familiar with the equipment should operate the equipment. Carefully read all installation instructions before operation.

⚠ CAUTION

This machine is NOT to be operated by minors. Minors are classified as anyone under the age of 18.

NOTE

The information, specifications and illustrations contained in this manual represent the latest data available at time of publication. Right is reserved to make changes as required at the discretion of Gold Medal Products Company without notice.

TABLE OF CONTENTS

Section…….……..**PG**
Corn Treat……..10
Pralinator……15
Combo Kandy King……...19

Digital Corn Treat, Pralinator, and Combo Kandy King

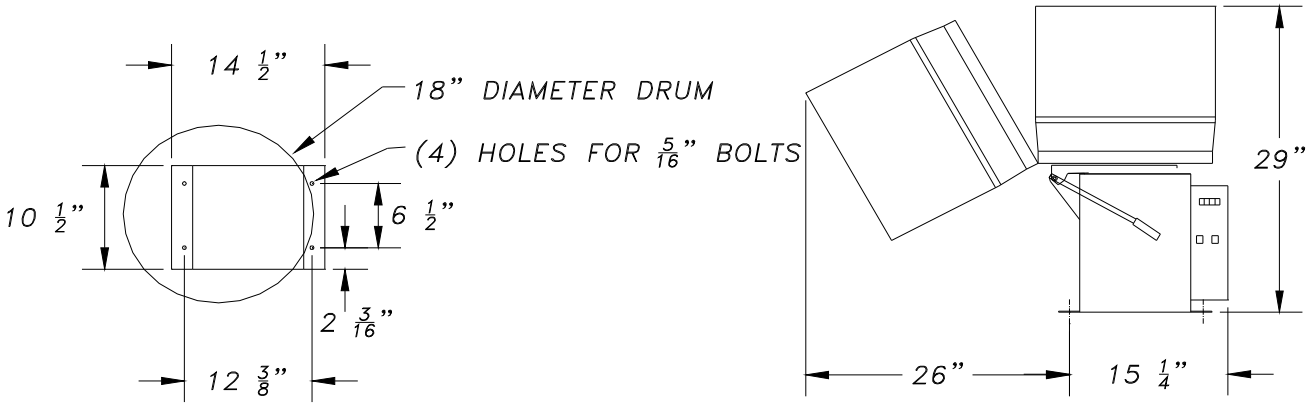

RH Corn Treat Model Shown – from Operator Side

Digital Model	Description	Power Requirements	Plug
2174EL	LH Corn Treat	120V-1908 watts	20 amp (NEMA 5-20P)
2174ER	RH Corn Treat	120V-1908 watts	20 amp (NEMA 5-20P)
2175EL	LH Corn Treat	120/208v or 120/240v – 3380watts	20 amp 4 wire (L14-20P)
2175ER	RH Corn Treat	120/208v or 120/240v - 3380watts	20 amp 4 wire (L14-20P)
2180EL	LH Pralinator	120V-1908 watts	20 amp (NEMA 5-20P)
2180ER	RH Pralinator	120V-1908 watts	20 amp (NEMA 5-20P)
2181EL	LH Pralinator	120/208v or 120/240v - 3380watts	20 amp 4 wire (L14-20P)
2181ER	RH Pralinator	120/208v or 120/240v - 3380watts	20 amp 4 wire (L14-20P)
2183EL	LH Combo Kandy King	120V-1908 watts	20 amp (NEMA 5-20P)
2183ER	RH Combo Kandy King	120V-1908 watts	20 amp (NEMA 5-20P)
2182EL	LH Combo Kandy King	120/208v or 120/240v - 3380watts	20 amp 4 wire (L14-20P)
2182ER	RH Combo Kandy King	120/208v or 120/240v - 3380watts	20 amp 4 wire (L14-20P)
2175XEL	LH Corn Treat	230v - 3380watts	3 conductor Schuko
2175XER	RH Corn Treat	230v – 3380watts	3 conductor Schuko
2181XEL	LH Pralinator	230v - 3380watts	3 conductor Schuko
2181XER	RH Pralinator	230v - 3380watts	3 conductor Schuko
2182XL	LH Combo Kandy King	230v - 3380watts	3 conductor Schuko
2182XR	RH Combo Kandy King	230v - 3380watts	3 conductor Schuko

Features:

- Digital Display Temperature Control
- Combo Kandy King models include Drums and Paddles for Nuts and Caramel Corn

Dimensions:

Dimensions shown above are for the Corn Treat (caramel corn) Mode
For Pralinators, the height from the base is 8" shorter or 23".

Agency Approvals: U.L., NSF

Gold Medal Products Co.
10700 Medallion Drive
Cincinnati, Ohio 45241-4807
Phone: 513-769-7676 fax: 513-769-8500 e-mail: www.gmpopcorn.com
11/02

FORWARD

This manual covers the Digital Corn Treat, Pralinator, and Combo Kandy King (both floor models and units) with the stationary 2174EL/ER, 2175EL,ER, 2180EL/ER, 2181EL/ER, 2183EL/ER, 2182EL/ER. You can be very proud of your product. In addition to being an attractive "eye catcher", it contains various engineering innovations which make it the leader in the industry. The exterior of the machine is designed and built-up to present an attractive appearance for many years.

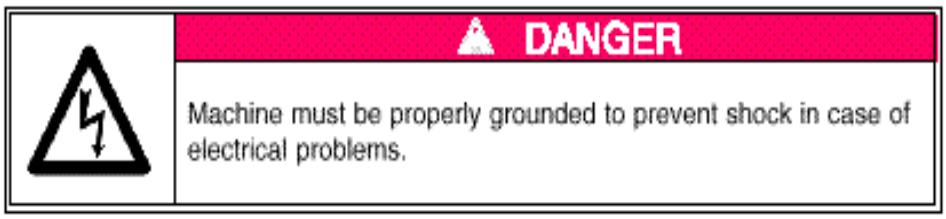

INSTALLATION

CHECKING SHIPMENT

Unpack the shipping crate and check thoroughly for any damage which may have occurred in transit. Any claims should be filed immediately with the transportation company.

ELECTRICAL REQUIREMENTS

Voltage for the 2174EL/ER, 2180EL/ER, 2183EL/ER is 120 volt, 60 cycle single phase. A wall receptacle is not supplied. Only for the 2175EL/ER, 2181EL/ER, 2182EL/ER This receptacle will accept the attachment plug on your machine and must be used. The machine will draw a maximum of 20amps. Your electrician must finish sufficient current for the proper operation of your machine. We recommend that this machine be fused on a line by itself.

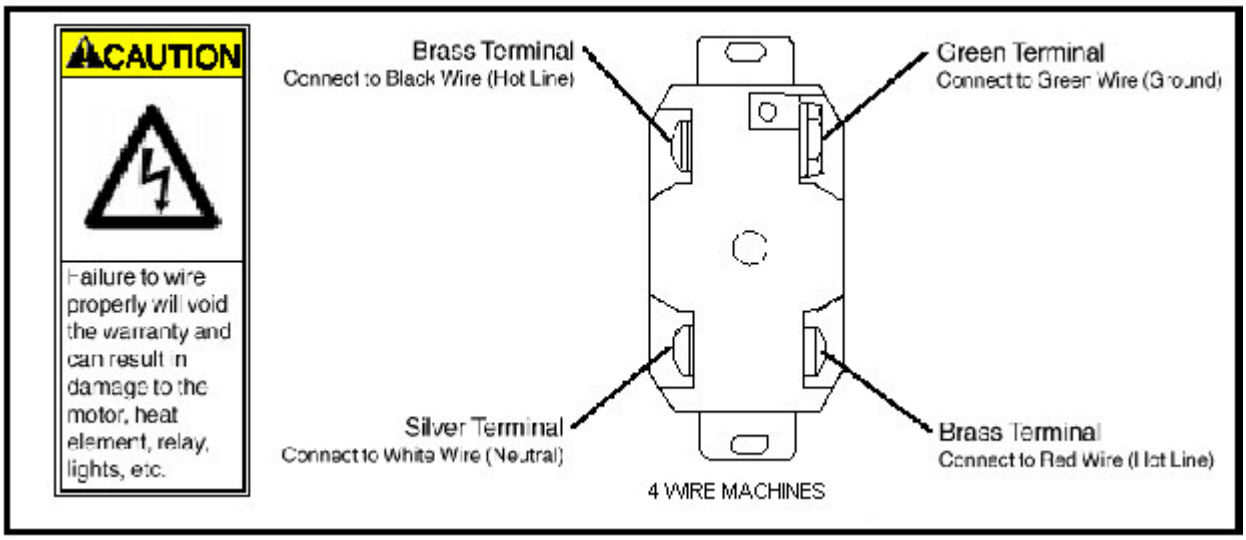

CONTROLS AND THEIR FUNCTION

HEAT SWITCH
This rocker switch in the “ON” position energizes the heating elements in the bottom of the kettle.

MOTOR SWITCH
With this rocker switch in the “ON” position, the agitator motor will run continuously.

PRALINATOR/CORN TREAT SWITCH
This rocker switch in the Pralinator position and the motor switch off will run the agitator motor 55 seconds of every minute. In the Corn Treat position, the agitator motor will run 15 seconds of every minute.

HEAT CONTROL
The machine comes from the factory preset at either 280°F for Corn Treat Centers or 310°F for Pralinators. If more or less heat is required, remove the silver hole plug or cover plate located on the front panel of the control box. This will allow you to access the heat control adjustment potentiometer. Turn the potentiometer clockwise to increase the temperature.

To calibrate the heat control for corn treat, Fill the mixing bowl with a one inch depth of corn oil. Use an accurate thermometer to measure the temperature of the oil in the mixing bowl. Stir the oil while it heats. When the oil reaches 280°F slowly turn the potentiometer counter clockwise until the buzzer sounds. If the buzzer sounds before the temperature reaches 280°F turn the potentiometer clockwise until the buzzer stops and continue to turn an additional 1/8 of turn.

To calibrate the digital control for Pralinator follow the above instructions except use a final oil temperature of 310°F.

Note: The sound of the buzzer always signals temperature cut-off.

CARE AND CLEANING

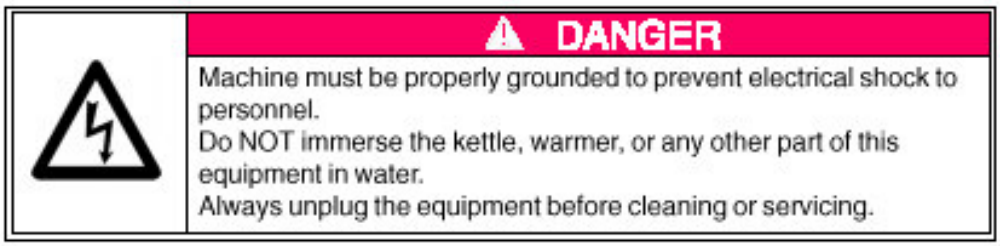

STEAM CLEANING
The easiest way to clean the kettle is to pour 8 ounces of water into the kettle while it is still hot. Place the lid back on the kettle. Let it steam for approximately ten minutes. Remove the lid and dump out the water. You will probably have to steam the kettle twice to remove all traces of product. Releasing the draw latch makes the mixing drum easy to remove for cleaning. The mixing drum can be taken to the sink to clean. The cabinet of your machine should be wiped cleaned daily; or more, depending on your usage.

NEW PADDLE & HUB SEAL KIT INSTALLATION

1. Unscrew the wing bolts and remove both mix paddles.
2. Remove the old hub seal assembly.
3. Clean the area around the center hub. Clean up all food and carbon residue.
4. Remove any burrs on the top edge of the center hub. Use a fine grit emery paper to lightly sand the surface. If the burrs are not removed, damage may occur to the hub assembly during installation.
5. Lightly lubricate the center hub of the kettle with a small amount of vegetable oil to allow for easy installation of the hub seal assembly.
6. Slide the hub seal assembly down the agitator shaft. Apply pressure to ease the assembly over the center hub of the kettle until it seats properly. (See diagram below.)
7. After the hub seal assembly has been properly installed, place the new mix paddle on the bottom and one existing paddle on the top of the agitator shaft.
8. Replace the wing bolts and finger tighten.

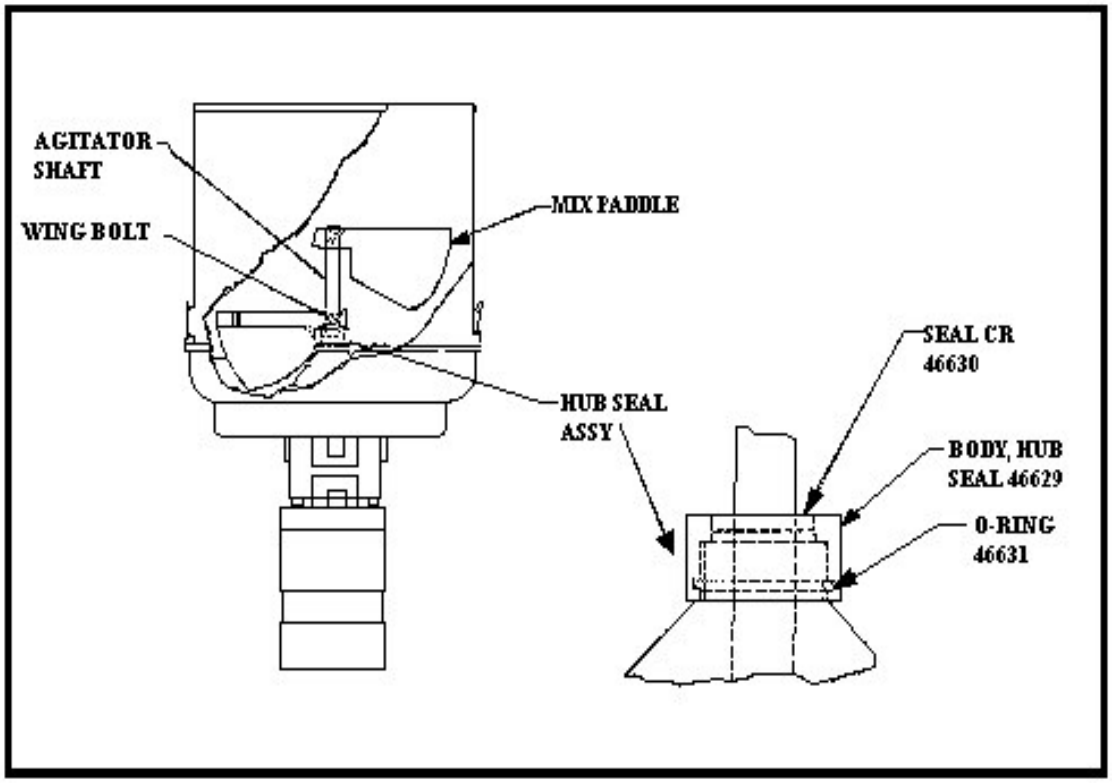

MAINTENANCE INSTRUCTIONS

⚠ CAUTION

THE FOLLOWING SECTIONS OF THIS MANUAL ARE INTENDED ONLY FOR QUALIFIED SERVICE PERSONNEL WHO ARE FAMILIAR WITH ELECTRICAL EQUIPMENT. THESE ARE NOT INTENDED FOR THE OPERATOR.

⚠ WARNING

Adequate eye protection must be used when servicing this equipment to prevent the possibility of injury.

DANGER

Do NOT immerse the equipment in water.
Unplug your machine before servicing.

ORDERING SPARE PARTS

1. Identify the needed part by checking it against the photos, illustrations, and/or the parts list.
2. When ordering, please include part number, part name, and quantity needed.
3. Please include your model name, serial number, and date of manufacture (located on the machine nameplate) with your order.
4. Address all parts orders to:

Parts Department
Gold Medal Products Co.
10700 Medallion Drive
Cincinnati, Ohio 45241-4807

or, place orders at:
(800) 543-0862
(513) 769-7676
Fax: (513) 769-8500
E-mail: info@gmpopcorn.com
Web Page: www.gmpopcorn.com

CORN TREAT SECTION

INSTRUCTIONS FOR MAKING CARAMEL CORN

1. Set the heat controller to for the Corn Treat Temperature. (for Combo Kandy King only)
2. Set the Pralinator/Corn Treat switch to the Corn Treat position (for Combo Kandy King only).
3. Turn the heat switch "ON".
4. Add 10-12 ounces of water, one carton of Gold Medal Caramel Corn Mix and four (4) cups of granulated sugar.

   NOTE: When using the Gold Medal "One Step" Caramel Corn Mix, do NOT add granulated sugar.

5. Turn the motor switch "ON" and mix for approximately one minute. Turn the motor switch "OFF". (With the heat switch "ON" the motor will run for 15 seconds every minute.)
6. Add four (4) ounces of stick coconut oil or vegetable oil.
7. Allow the mix to cook until the buzzer sounds at 280° F product temperature.
8. Turn the heat switch "OFF".
9. Turn the motor switch "ON".
10. Add five gallons of pre popped corn.
11. Allow the corn to mix for approximately thirty (30) seconds with the kettle in the upright position.
12. Move the kettle to the mix position and mix the popcorn until it is thoroughly coated.
13. Dump the caramel corn into the cooling pan.

PARTS LIST

Item No	2174EL Part No	2174ER Part No	2175EL Part No	2175ER Part No	Description
9	46006	46006	46006	46006	Tilt Lever
26	46101	~~~	46101	~~~	LH Dump Bar Assy.
1	~~~	46103	~~~	46103	RH Dump Bar Assy.
2	74660	74660	74660	74660	Torsion Spring
3	74661	74661	74661	74661	Collar
4	46140	46140	46140	46140	Tilt Lever Coupling
5	46144	46144	46144	46144	Coupling Body 5/8 Bore
6	46145	46145	46145	46145	Coupling Body 3/4 Bore
7	46152	46152	46152	46152	Kettle Rest
8	46286	46286	46286	46286	Mixing Paddle
9	46288	46288	46288	46288	Mixing Drum
10	47580	47580	~~~	~~~	Lead In Cord
11	~~~	~~~	41034	41304	Leadin Cord
12	48682	~~~	48682	~~~	LH Control Box Weldment
	~~	48681	~~~	48681	RH Control Box Weldment
	48685	48685	48685	48685	Pedestal Welded Assy.
	42006	42006	42006	42006	Terminal Block
	42798	42798	42798	42798	Switch, Lighted Rocker
	46081	46081	46081	46081	Relay, Power
	46118	46118	46118	46118	Buzzer Signal
	48301	48301	48301	48301	Capacitor Strap
	82085	82085	82085	82085	Kettle Drive Motor
	67207	67207	67207	67207	Motor Spacer
	12889	12889	12889	12889	Standoff
	40245	40245	~~~	~~~	Heat Element 1250W
	~~	~~~	40348	40348	Heat Element 2000W
	46121	46121	46121	46121	Motor Mount
	46143	46143	46143	46143	Agitator Shaft
	46280	46280	46280	46280	Kettle
	46439	46439	~~~	~~~	Heat Element 275W
	~~	~~~	41536	41536	Heat Element 1000W
	67174	67174	67174	67174	Element Retainer Bracket
	67185	67185	67185	67185	Heat Element 220W
	67995	67995	67995	67995	Bottom Cover
	68010	68010	68010	68010	RTD Heat Sensor
	82219	82219	82219	82219	Thermostat Kettle L-510
	82550	82550	82550	82550	Kettle Mount Bracket Casting
	46326	46326	46326	46326	500 ohm Potentiometer
	48688	48688	48688	48688	Percentage Timer
	55057	55057	55057	55057	RTD Temperature Control
	48689	48689	48689	48689	240k Resistor Red-Yel-Yel
	48690	48690	48690	48690	750k Resistor Violet-Green-Yel

Picture for parts list.

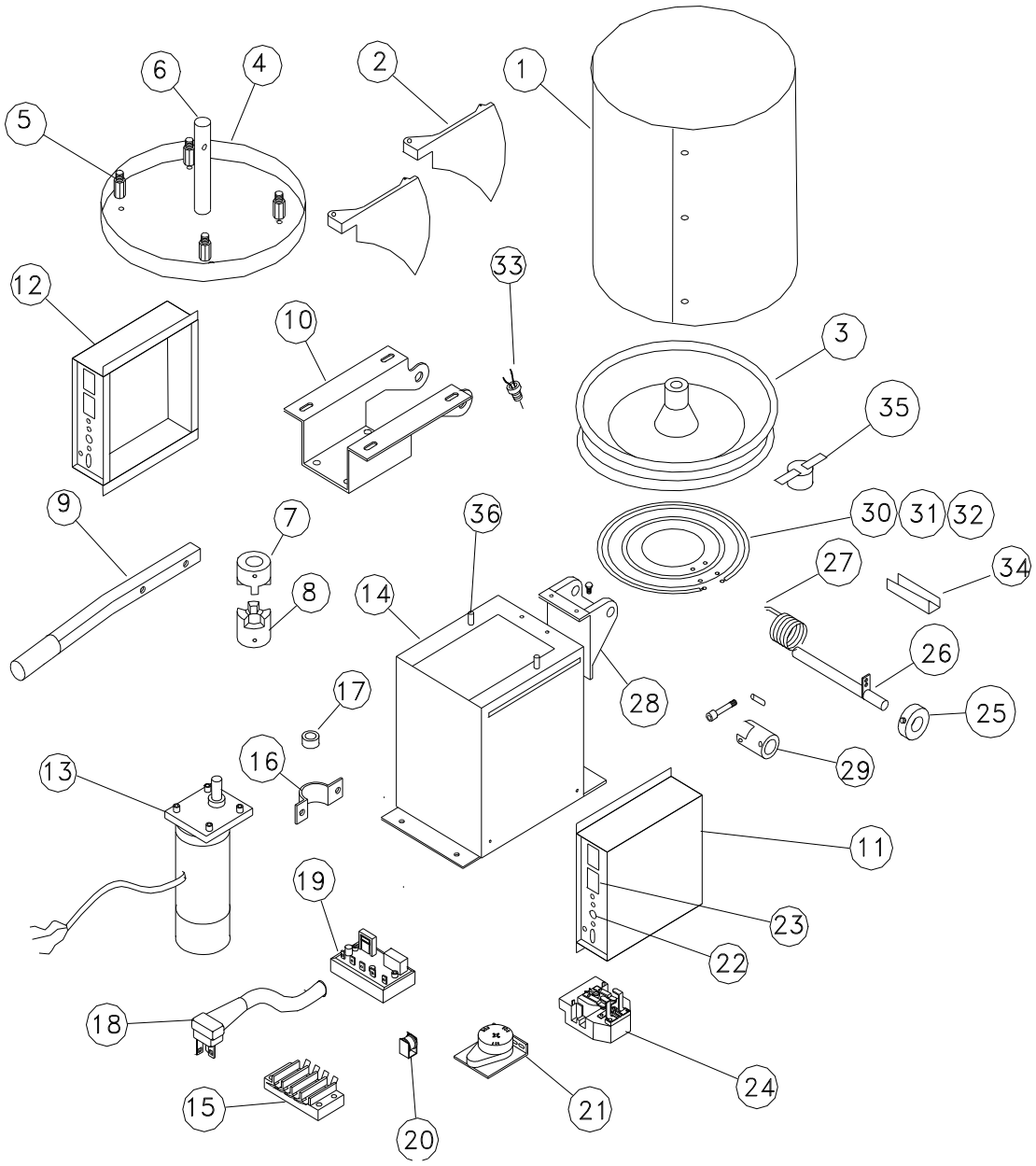

ELECTRIC SCHEMATIC

This is for the 2174ER AND 2174EL.

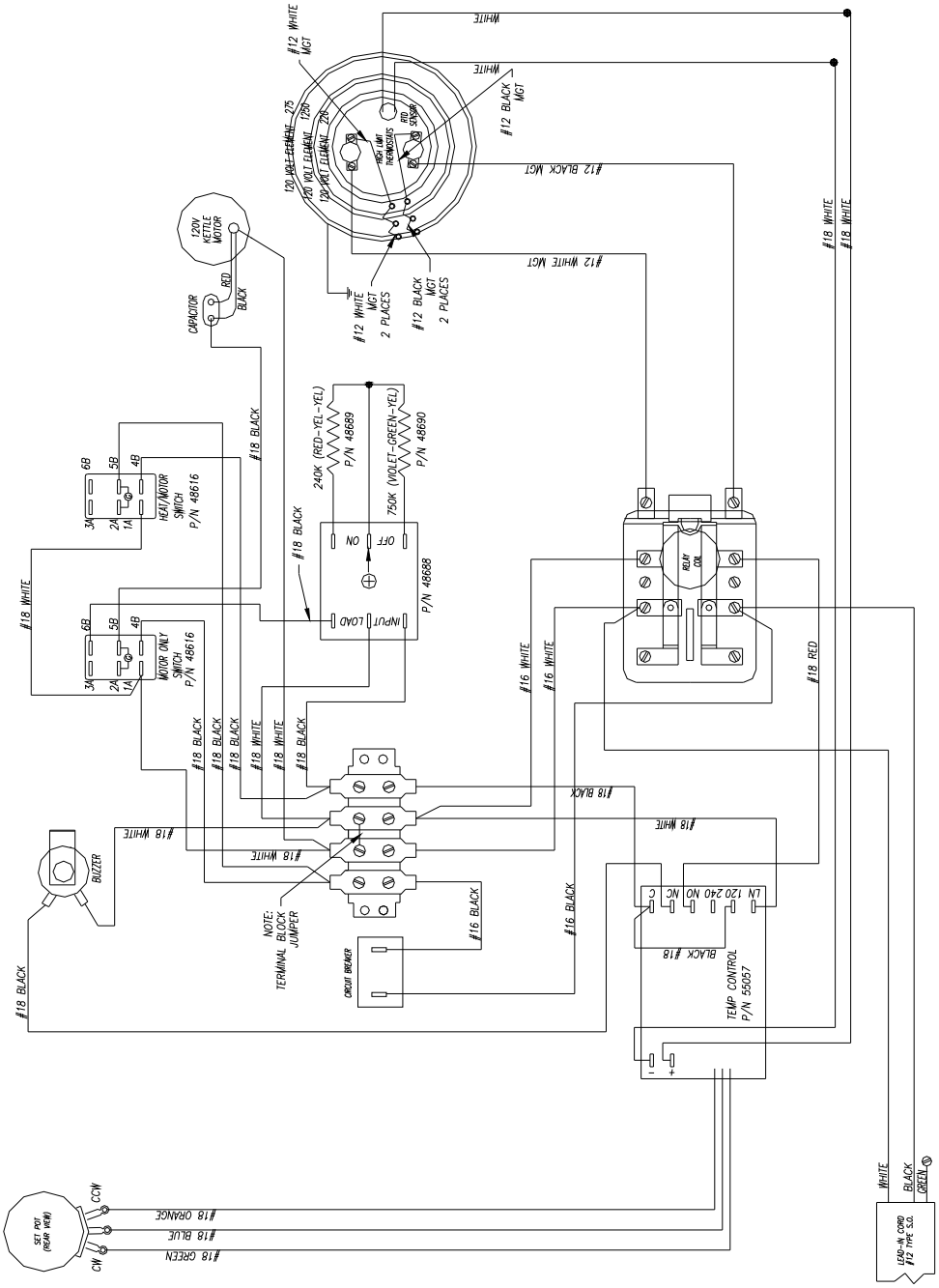

ELECTRIC SCHEMATIC

This is for the 2175EL and 2175ER.

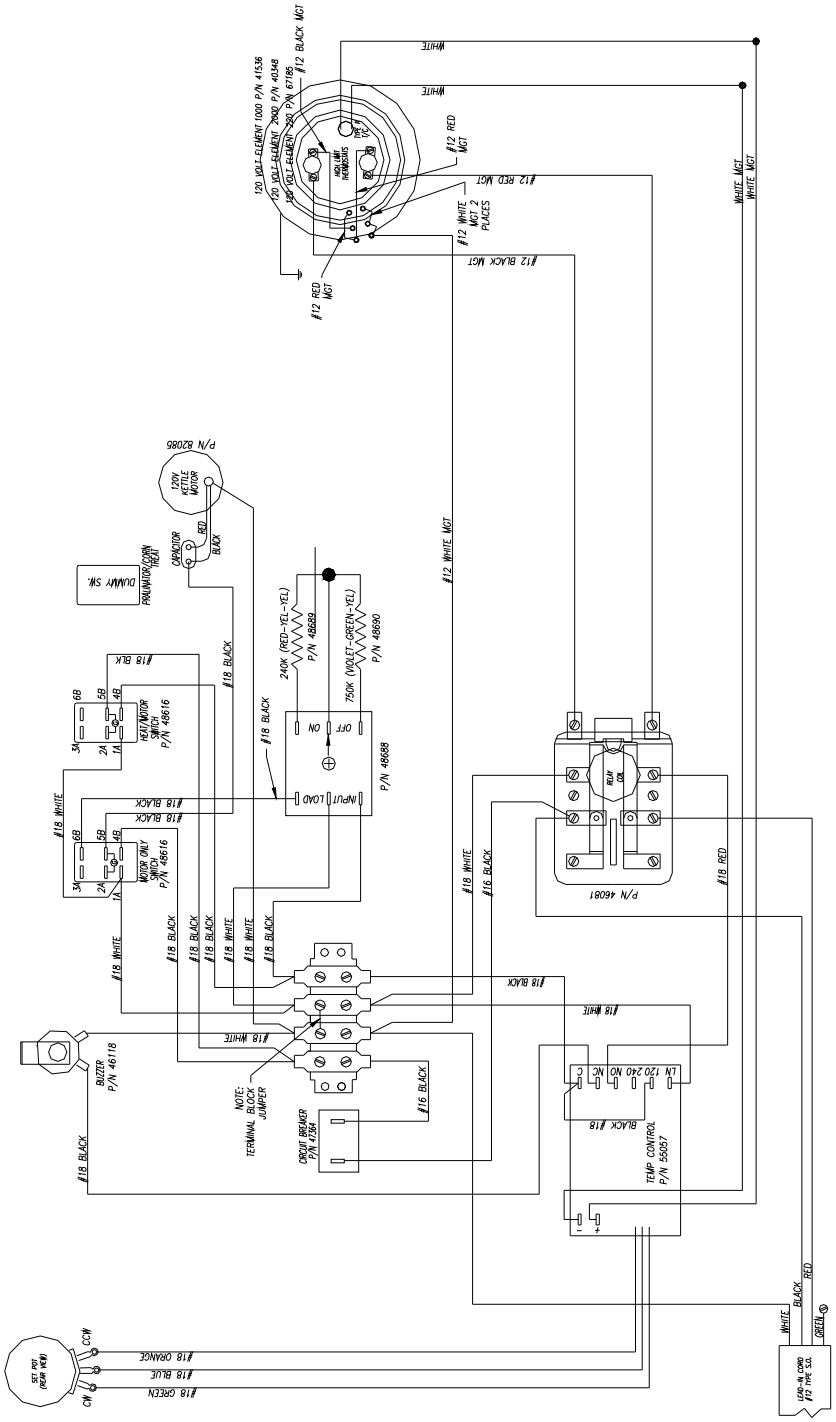

PRALINATOR SECTION

INSTRUCTIONS FOR MAKING FROSTED NUTS

1. Set the heat controller to Pralinator temperature. (for Combo Kandy King only).
2. Set the Pralinator/Corn Treat switch to the Pralinator position (for Combo Kandy King only).
3. Make a solution of (3) parts water to (1) part Gold Medal imitation vanilla (item #4515). We recommend making at least one gallon of this "vanilla water" (1qt. of item #4515 + 3 qts. water).
4. Measure recommended ounces of water (depending on the size of the batch you are making) for Step 6 and a minimum of recommended ounces for Step 8.
5. Turn on the heat switch and add recommended amount of pounds of nuts. (May we suggest raw almonds, raw pecans, or roasted peanuts with skins removed).
6. Add the contents of the package and recommended ounces of vanilla water (see below).
7. Allow to heat and mix until the buzzer sounds.
8. At the buzzer, the nuts can be finished in two ways:
    a. Spray on vanilla water (see above) until the buzzer stops to produce a consistent coat with a matte finish.
    b. Pour on the recommended ounces of vanilla water (see below) to produce a glossy, variable finish.
9. Dump the frosted nuts onto a cooling tray (such as item #4140 18" x 26" aluminum pan), separate and allow to cool 10 minutes before serving or packaging.

Recommendations for the 12oz package of Frosted Nut Mix:
For Step 4: 6 ounces and a minimum of 2-3 ounces
For Step 5: 1¼ lbs of nuts (1 full blue cup)
For Step 8: 2 ounces of vanilla water

Recommendations for the 24oz package of Frosted Nut Mix:
For Step 4: 12 ounces and a minimum of 4-6 ounces
For Step 5: 2½ lbs of nuts (2 full blue cups)
For Step 8: 4 ounces of vanilla water

PARTS LIST

Item No	2180EL Part No	2180ER Part No	2181EL Part No	2181ER Part No	Description
9	46006	46006	46006	46006	Tilt Lever
26	46101	~~~	46101	~~~	LH Dump Bar Assy.
	~~	46103	~~~	46103	RH Dump Bar Assy.
27	74660	74660	74660	74660	Torsion Spring
25	74661	74661	74661	74661	Collar
29	46140	46140	46140	46140	Tilt Lever Coupling
7	46144	46144	46144	46144	Coupling Body 5/8 Bore
8	46145	46145	46145	46145	Coupling Body 3/4 Bore
36	46152	46152	46152	46152	Kettle Rest
2	48696	48696	48696	48696	Mixing Paddle
1	67222	67222	67222	67222	Mixing Drum
18	47580	47580	~~~	~~~	Lead In Cord
	~~	~~~	41034	41034	Lead In Cord
11	48682	~~~	48682	~~~	LH Control Box Weldment
	~~	48681	~~~	48681	RH Control Box Weldment
14	48685	48685	48685	48685	Pedestal Welded Assy.
15	42006	42006	42006	42006	Terminal Block
23	42798	42798	42798	42798	Switch, Lighted Rocker
24	46081	46081	46081	46081	Relay, Power
21	46118	46118	46118	46118	Buzzer Signal
16	48301	48301	48301	48301	Capacitor Strap
13	82085	82085	82085	82085	Kettle Drive Motor
	67207	67207	67207	67207	Motor Spacer
	12889	12889	12889	12889	Standoff
	40245	40245	~~~	~~~	Heat Element 1250W
	~~	~~~	40348	40348	Heat Element 2000W
10	46121	46121	46121	46121	Motor Mount
6	48678	48678	48678	48678	Agitator Shaft
3	46280	46280	46280	46280	Kettle
	46439	46439	~~~	~~~	Heat Element 275W
	~~	~~~	41536	41536	Heat Element 1000W
34	67174	67174	67174	67174	Element Retainer Bracket
	67185	67185	67185	67185	Heat Element 220W
4	67995	67995	67995	67995	Bottom Cover
33	68010	68010	68010	68010	RTD Heat Sensor
35	82219	82219	82219	82219	Thermostat Kettle L-510
28	82550	82550	82550	82550	Kettle Mount Bracket Casting
46326	46326	46326	46326	46326	500 ohm Potentiometer
48688	48688	48688	48688	48688	Percentage Timer
55057	55057	55057	55057	55057	RTD Temperature Control
48691	48691	48691	48691	48691	910k Resistor White-Brn-Yel
48692	48692	48692	48692	48692	82k Resistor Grey-Red-Org

ELECTRIC SCHEMATIC

This is for the 2180ER AND 2180EL.

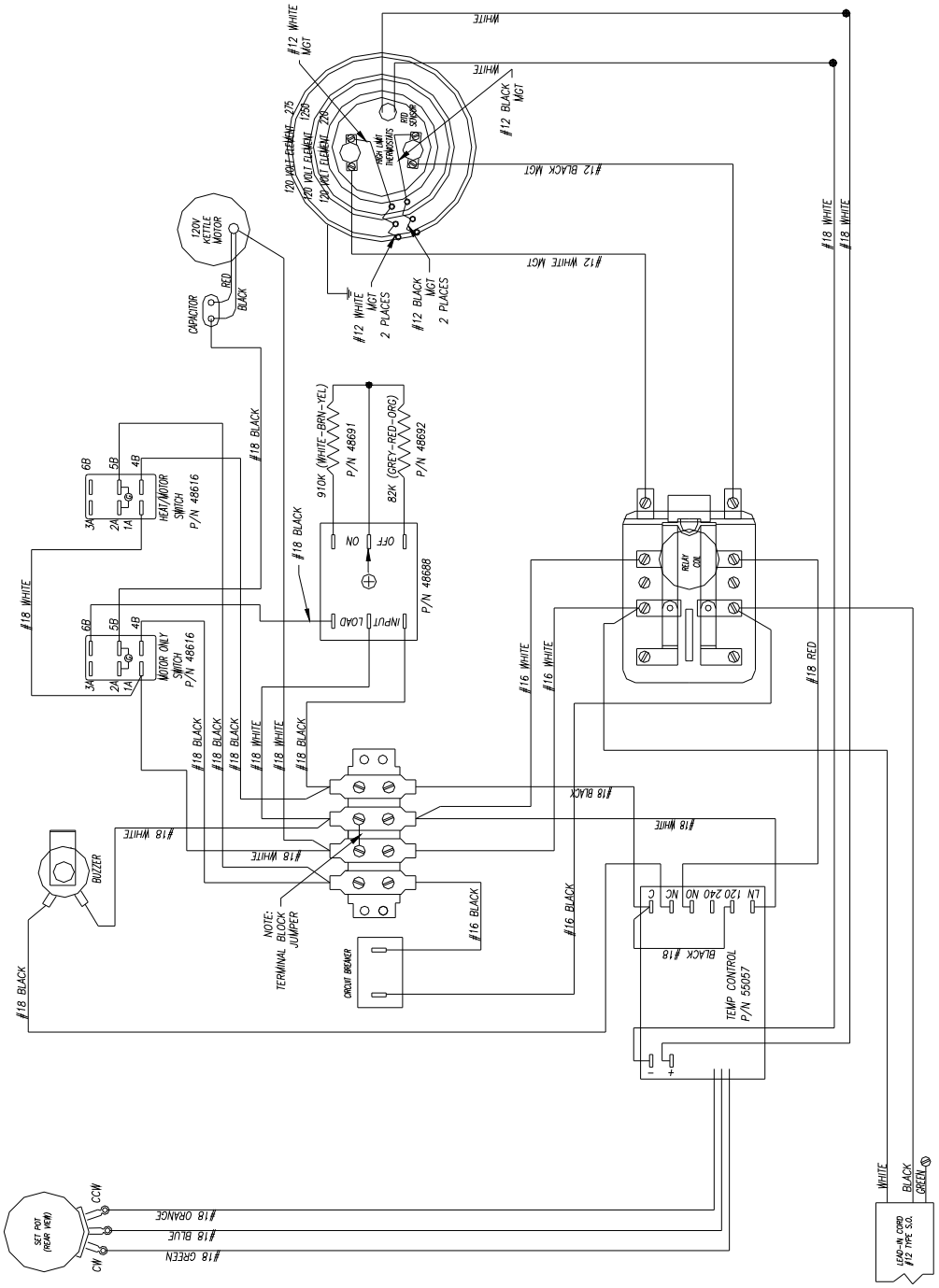

ELECTRIC SCHEMATIC

This is for the 2181ER AND 2181EL.

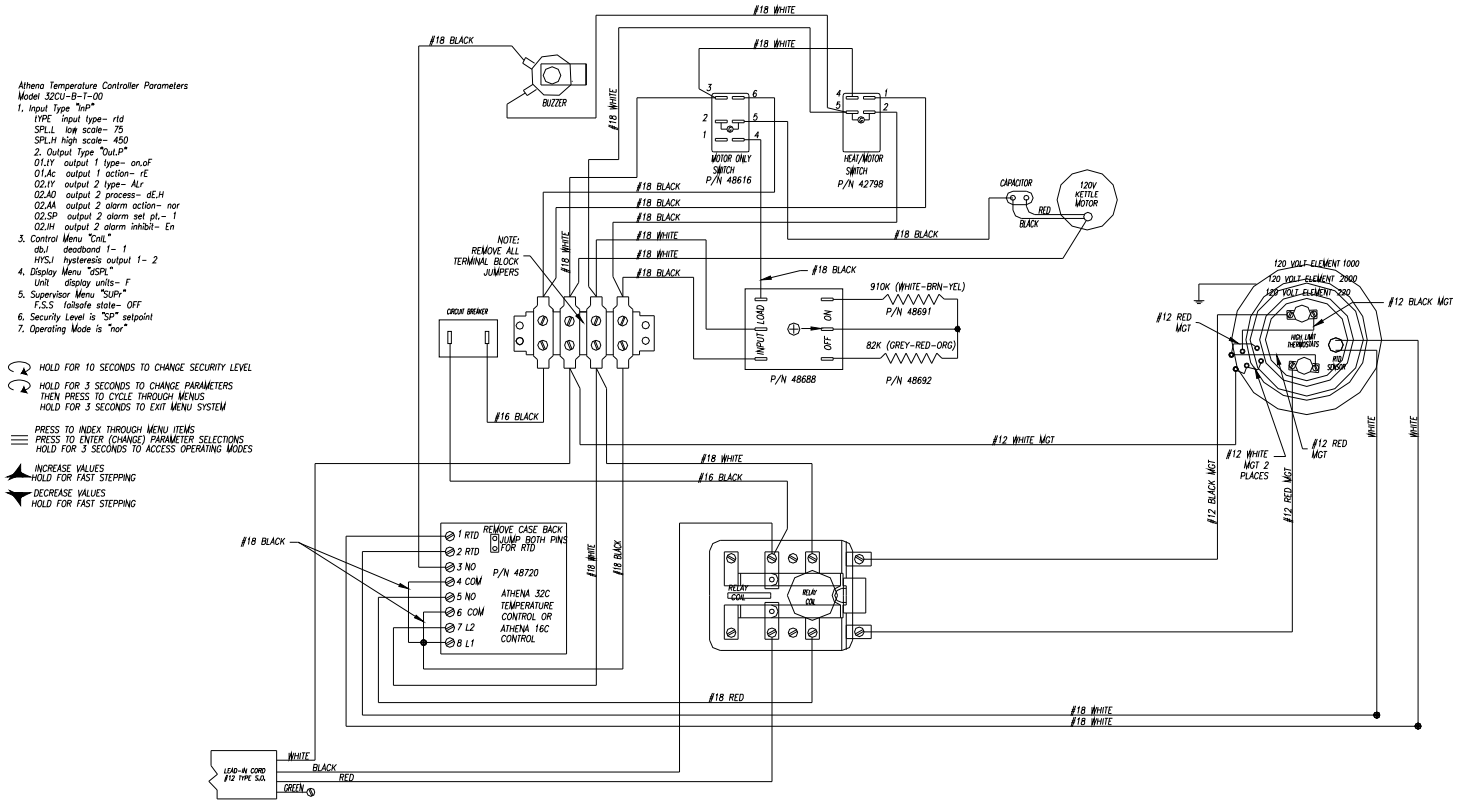

COMBO KANDY KING SECTION

INSTRUCTIONS TO CHANGE BETWEEN FROSTED NUTS AND CARAMEL CORN

To change between Corn Treat and Pralinator the following items must be changed:

A. Heat controller set point
B. Paddle timing switch
C. Shaft extension and Corn Treat paddles or Pralinator paddles.
D. Kettle drum

A. The set point of the heat control is changed as follows:

1. Corn Treat temperature range is 360 to 400°F.
2. Pralinator temperature range is 375 to 415°F.

To calibrate the digital control for corn treat, set the digital control set point (SP) to 400°F. Fill the mixing bowl with a one inch depth of corn oil. Use an accurate thermometer to measure the temperature of the oil in the mixing bowl. Stir the oil while it heats. When the oil reaches 280°F observe the temperature displayed on the digital heat control. This temperature is the digital heat control set point (SP).

To calibrate the digital control for Pralinator follow the above instructions except set the initial SP at 415°F and use a final oil temperature of 310°F.

B. Set the paddle timing switch on the front panel on the machine to either Corn Treat or Pralinator. Corn Treat, the paddles turn for 15 seconds of every minute. Pralinator, the paddles turn for 55 seconds of every minute.

C. Use the shaft extension and two paddles for the Corn Treat. Note the shaft extension mounts to the fixed shaft in the machine with the shorter thumb screw. Note the shaft extension is not used to the Pralinator.

D. Mount the large drum for the Corn Treat. Mount the small drum for the Pralinator.

E. After the change over, follow the instructions on the mix package or turn to pages 11 for caramel corn and page 17 for frosted nuts for mixing instructions.

PARTS LIST

8	46140	46140	46140	46140	Tilt Lever Coupling
7	46144	46144	46144	46144	Coupling Body 5/8 Bore
8	46145	46145	46145	46145	Coupling Body 3/4 Bore
36	46152	46152	46152	46152	Kettle Rest
	46286	46286	46286	46286	Mixing Paddle
	48696	48696	48696	48696	Mixing Paddle
1	46288	46288	46288	46288	Mixing Drum
1	67222	67222	67222	67222	Mixing Drum
18	47580	47580	~~~	~~~	Leading In Cord
	~~	~~~	41034	41034	Leading In Cord
11	48682	~~~	48682	~~~	LH Control Box Weldment
	~~	48681	~~~	48681	RH Control Box Weldment
14	48685	48685	48685	48685	Pedestal Welded Assy.
15	42006	42006	42006	42006	Terminal Block
23	42798	42798	42798	42798	Switch, Lighted Rocker
24	46081	46081	46081	46081	Relay, Power
21	46118	46118	46118	46118	Buzzer Signal
16	48301	48301	48301	48301	Capacitor Strap
13	82085	82085	82085	82085	Kettle Drive Motor
	67207	67207	67207	67207	Motor Spacer
	12889	12889	12889	12889	Standoff
	40245	40245	~~~	~~~	Heat Element 1250W
	~~	~~~	40348	40348	Heat Element 2000W
10	46121	46121	46121	46121	Motor Mount
6	46143	46143	46143	46143	Agitator Shaft
3	46280	46280	46280	46280	Kettle
	46439	46439	~~~	~~~	Heat Element 275W
	~~	~~~	41536	41536	Heat Element 1000W
34	67174	67174	67174	67174	Element Retainer Bracket
	67185	67185	67185	67185	Heat Element 220W
4	67995	67995	67995	67995	Bottom Cover
33	68010	68010	68010	68010	RTD Heat Sensor
35	82219	82219	82219	82219	Thermostat Kettle L-510
28	82550	82550	82550	82550	Kettle Mount Bracket Casting
46326	46326	46326	46326	46326	500 ohm Potentiometer
48688	48688	48688	48688	48688	Percentage Timer
55057	55057	55057	55057	55057	RTD Temperature Control
48689	48689	48689	48689	48689	240k Resistor Red-Yel-Yel
48690	48690	48690	48690	48690	750k Resistor Violet-Green-Yel
48691	48691	48691	48691	48691	910k Resistor White-Brn-Yel
48692	48692	48692	48692	48692	82k Resistor Grey-Red-Org

ELECTRIC SCHEMATIC

This is for the 2183ER, 2183EL, 2182ER AND 2182EL.

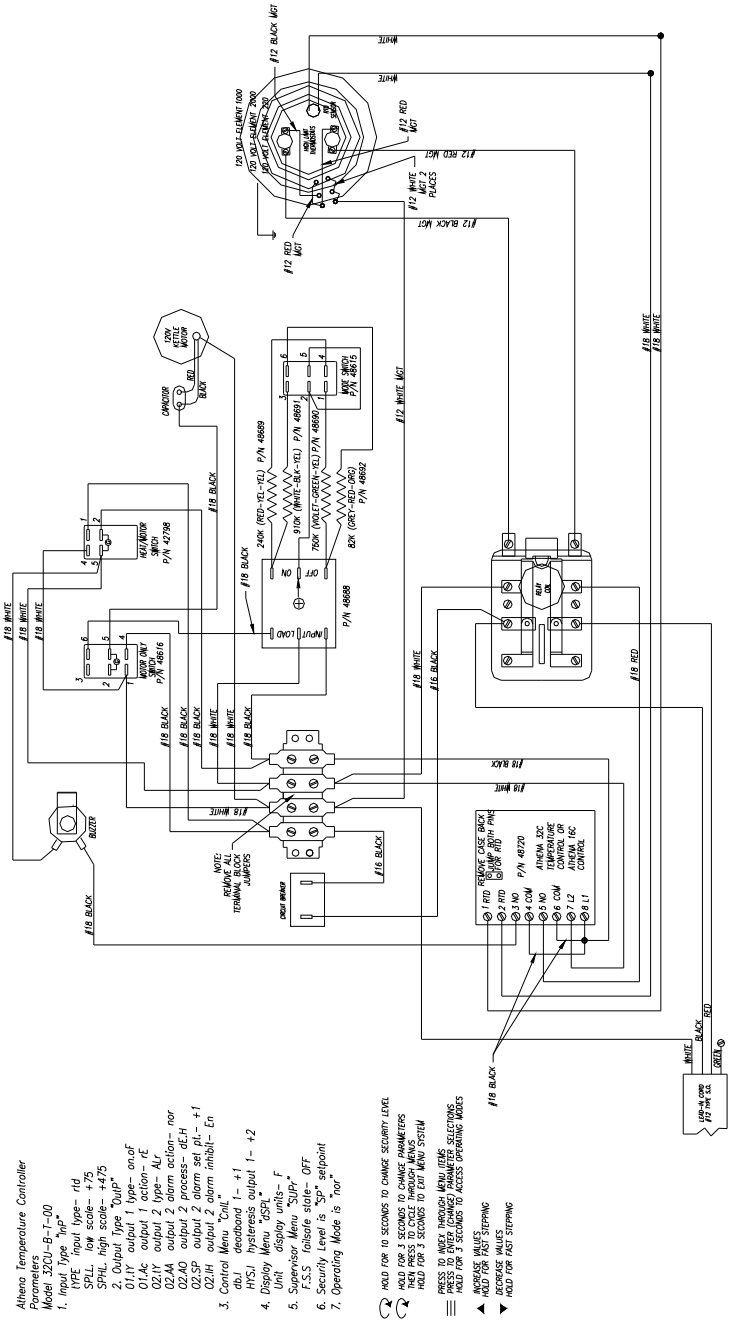

WARRANTY

WE WARRANT to the original purchaser the Gold Medal equipment sold by us to be free from defects in material or workmanship under normal use and service. Our obligation under this warranty shall be limited to the repair or replacement of any defective part for a period of six (6) months from the date of sale to the Original Purchaser with regard to labor and two (2) years with regard to parts and does not cover damage to the equipment caused by accident, alteration, improper use, voltage, abuse, or failure to follow instructions.

THIS WARRANTY IS IN LIEU OF ALL OTHER WARRANTIES EXPRESSED OR IMPLIED, AND OF ALL OTHER OBLIGATIONS OR LIABILITIES ON OUR PART, INCLUDING THE IMPLIED WARRANTY OF MERCHANTIBILITY. THERE ARE NO WARRANTIES WHICH EXTEND BEYOND THE DESCRIPTION ON THE FACE HEREOF. We neither assume, nor authorize any other person to assume for us, any other obligation or liability in connection with the sale of said GOLD MEDAL equipment or any part thereof.

The term "Original Purchaser" as used in this warranty shall be deemed to mean that person, firm, association, or corporation who was billed by the GOLD MEDAL PRODUCTS COMPANY, or their authorized distributor for the equipment.

THIS WARRANTY HAS NO EFFECT AND IS VOID UNLESS THE ORIGINAL PURCHASER FIRST CALLS GOLD MEDAL PRODUCTS COMPANY AT 1-800-543-0862 TO DISCUSS WITH OUR SERVICE REPRESENTATIVE THE EQUIPMENT
PROBLEM, AND, IF NECESSARY, FOR INSTRUCTIONS CONCERNING THE REPAIR OR REPLACEMENT OF PARTS.

NOTE: This equipment is manufactured and sold for commercial use only.

GOLD MEDAL PRODUCTS COMPANY
10700 Medallion Drive
Cincinnati, Ohio 45241-4807 USA
www.gmpopcorn.com
Phone: 1-800-543-0862
Fax: 1-800-542-1496