sodir

ROAST CONCEPT

ELECTRIC ROTISSERIE ROASTERS

Let your customers see the process and enjoy the results!

RBE 25 Shown with optional double spits

- Great for roasting chicken, chops, ribs, fish and vegetables
- Water bath/drip pan ensures smokeless operation and easy cleaning
- Attractive high polish stainless steel finish
- Infrared Quartz elements for crisp and juicy roasting
- Tinted safety glass and interior light
- 2, 3 spit and 5 basket models
- Optional roasting baskets available

PARADE

RBE 8 208/240/3

RBE 8-1 208/240/1

ROAST CAPACITY:
2 spit / 6-8 birds

WARM CAPACITY:
Up to 10 birds

VISTA

RBE 12 208/240/3

RBE 12-1 208/240/1

ROAST CAPACITY:
3 spit / 9-12 birds

RITZ

RBE 25 208/240/3

ROAST CAPACITY:
5 basket / 16-25 birds

TURBO VISION

RE 2 208/240/1

WARMING CAPACITY:
up to 40 birds

RBE 25

RE 2

OPTIONAL ROASTING BASKET *

* for models RBE 8, RBE 12

EQUIPEX LTD.
765 WESTMINSTER STREET PROVIDENCE, RI 02903
TEL: (401)273-3300 FAX: (401)273-3328 E-mail: sales@equipex.com
www.equipex.com

ELECTRIC ROTISSERIE ROASTERS

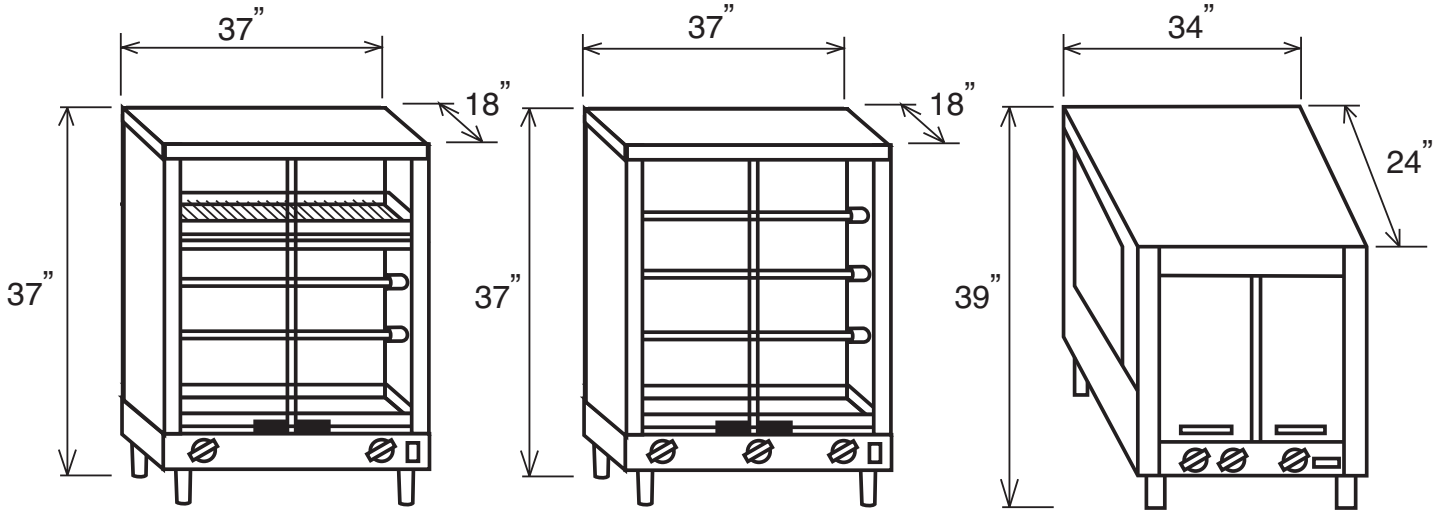

RBE 8 **RBE 12** **RBE 25**

INSTALLATION CLEARANCE : 4" EACH SIDE, TOP AND BACK

SPECIFICATIONS

MODEL	ELECTRICAL	DIMENSIONS	SHIPPING WEIGHT	NEMA PLUG
RBE 8	208/240V, 3PH, 4.4KW, 11/13 Amps	37"Wx18"Dx37"H	180 lbs	cord only
RBE 8-1	208/240V, 1PH, 4.4KW, 18/21 Amps	37"Wx18"Dx37"H	180 lbs	L6-30 P
RBE 12	208/240V, 3PH, 6.6KW, 18/20 Amps	37"Wx18"Dx37"H	190 lbs	cord only
RBE 12-1	208/240V, 1PH, 6.6KW, 28/32 Amps	37"Wx18"Dx37"H	190 lbs	6-50 P
RBE 25	208/240V, 3PH, 9.5KW, 25/29 Amps	34"Wx24"Dx33"H (add 6" for legs)	280 lbs	cord only
RE 2	208/240V, 1PH, 2.5KW, 10/12 Amps	34"Wx24"Dx42"H (including 6" casters)	235 lbs	6-15 P

WARRANTY: Limited one year parts and labor

765 WESTMINSTER STREET PROVIDENCE, RI 02903
TEL: (401)273-3300 FAX: (401)273-3328 E-mail: sales@equipex.com
www.equipex.com