PIZZA CONCEPT

COUNTERTOP PIZZA OVENS

Pizza worth waiting for ...
but your customers won't have to!

PRIMO DUO

PZ 430D 208/240 V

CAPACITY: 2 - 16" pizza

BRICK PIZZA OVENS

- ❑ 16" fresh or frozen pizza in just 3-6 minutes
- ❑ Fire brick stone for authentic taste
- ❑ Quartz heating elements bring temperatures up to 660˚F
- ❑ Second thermostat regulates heat under deck to perfectly bake thin and thick crusts
- ❑ 10-12 minute preheating time
- ❑ 15 minute timer with continuous cooking feature
- ❑ See-through glass door with interior light
- ❑ PZ 430D - independent controls each deck
- ❑ Ideal for pizzerias and pubs, food retail stores, fast food and snack bars

PRIMO

PZ 430S 120 V

PZ 431S 208/240 V

CAPACITY: 1 - 16" pizza

UPPER CRUST

PZ 4302D 208/240 V

CAPACITY: 1 - 16" x 24" rectangular pizza or several personal size pizzas

SNACK PIZZA OVEN

- ❑ Stainless steel pizza oven with baking wire rack for par-baked or refrigerated pizza
- ❑ Rack mounted door with handle
- ❑ Top and bottom high output sheathed elements
- ❑ Temperature up to 660ºF with 15 minute timer
- ❑ Baking stone and frame assembly available for fresh or frozen pizza (optional)

PZ 400
120 V

CAPACITY: 1 - 14" pizza in 8-12 minutes

EQUIPEX LTD.
765 WESTMINSTER STREET PROVIDENCE, RI 02903
TEL: (401)273-3300 FAX: (401)273-3328 E-mail: sales@equipex.com
www.equipex.com

sodir

COUNTERTOP PIZZA OVENS

PZ 430S
PZ 431S

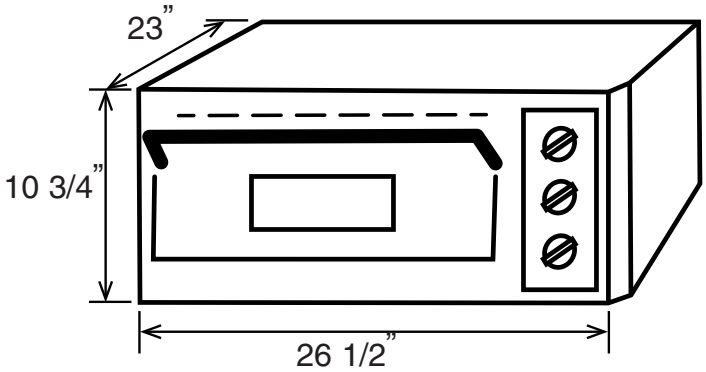

PZ 400

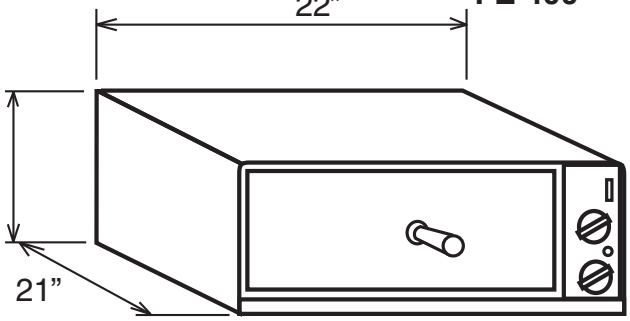

PZ 4302D

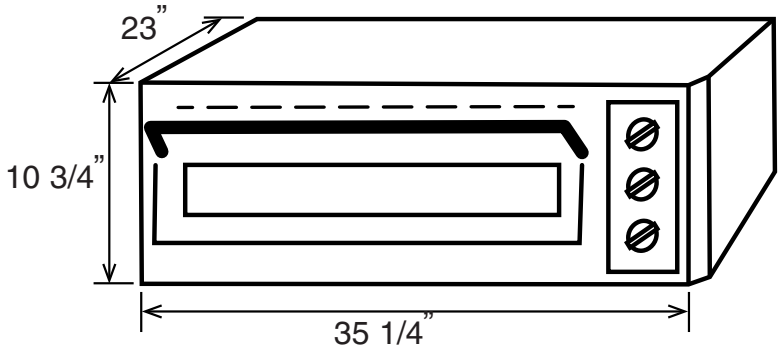

PZ 430D

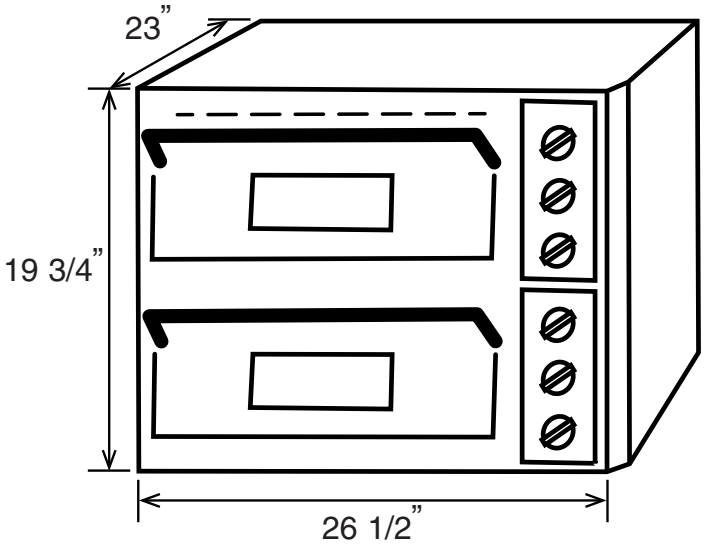

Installation Clearance : 4” Each Side, Top and Back

SPECIFICATIONS

MODEL	ELECTRICAL	EXTERNAL DIMENSIONS	INTERNAL DIMENSIONS	SHIPPING WEIGHT	NEMA PLUG
PZ 430S	120V, 1.8KW, 15 Amps	26½”Wx23”Dx10¾”H	17”Wx17”Dx3½”H	120 lbs	5-15 P
PZ 431S	208/240V, 1PH, 3.4KW, 13/15 Amps	26½”Wx23”Dx10¾”H	17”Wx17”Dx3½”H	120 lbs	6-20 P
PZ 430D	208/240V, 1PH, 7.2KW, 26/30 Amps	26½”Wx23”Dx19¾”H	(2) 17”Wx17”Dx3½”H	170 lbs	6-50 P
PZ 4302D	208/240V, 1PH, 5.7KW, 21/24 Amps	35¼”Wx23”Dx10¾”H	26”Wx17”Dx3½”H	180 lbs	L6-30 P
PZ 400	120V, 1PH, 1.3KW, 11 Amps	22”Wx21”Dx9”H	16”Wx16”Dx4”H	40 lbs	5-15 P
BFA	Fits PZ 400	16”Wx15”Dx¾”H		7 lbs	

WARRANTY: Limited one-year parts and labor

EQUIPEX LTD.
765 WESTMINSTER STREET PROVIDENCE, RI 02903
TEL: (401)273-3300 FAX: (401)273-3328 E-mail: sales@equipex.com
www.equipex.com