176 MITTEL DRIVE, WOOD DALE, IL 60191

DIGITAL DIPLOMAT 20 and 32 oz POPCORN MACHINE OPERATION MANUAL

120/208 - 240 Volt, Single and Three Phase, 60 Hz

230 Volt, Single Phase, 50 Hz

400 Volt, 3N~ Three Phase, 50 Hz

100/200 Volt, Single Phase, 50 & 60 Hz

Included in this manual:
***One Pop Option**
***Salt/Sugar Option**
***Self Serve Option**
***Ventless Hood Option**
***Elevator Option**

READ and **UNDERSTAND** these operating and safety instructions before operating this popcorn machine!

TABLE OF CONTENTS

I. Safety Alert Symbol 3

II. Safety First 3

III. Introduction. 3

IV. Purpose of Manual 4

V. Product Identification. 4

VI. Principles of Popcorn Machine Operation 4

VII. Control Switches. 6

VIII. Operating Instructions 6

IX. Sanitation Instructions 8

a. Popping Kettle

b. Cabinet. 10

Appendix A – Elevator Option 12

Appendix B – Self-Serve Option 14

I. SAFETY ALERT SYMBOL

The symbol shown is used to call your attention to instructions concerning your personal safety and the safety of others. Watch for this symbol. It points out important safety precautions. It means **ATTENTION! Become Alert! Your personal safety is involved!** Read the message that follows and be alert to the risk of personal injury or death.

II. SAFETY FIRST

The information in this manual is essential for the safe installation and operation of your Cretors popcorn machine. The manual must be read and understood before installing, and operating the equipment, or equivalent training must be provided.

"The employer shall instruct each employee in the recognition and avoidance of unsafe conditions, as well as, the regulations applicable to his work environment and to control or eliminate any hazards or other exposure to illness or injury". Ref.: 29 CFR 1926.20 (b)(4)(a)(2)

It is understood that safety rules within individual companies vary. If a conflict exists between the safety procedures contained in this manual and the rules of a using company, the more stringent rule should take precedence.

The purpose of equipotential bonding studs, terminals and systems is to join together the metalwork in a product, whether it needs to be grounded or not, so every point is at the same potential/voltage. This bonding is not intended to provide grounding (a separate low resistance ground-fault current path back to the source).

III. INTRODUCTION

This manual is filled with time-saving and money-saving information regarding your Cretors popcorn machine. There is nothing more important than the safety aids and warnings that are throughout this document. The Safety Alert Symbol is used to identify topics of primary safety concern wherever they appear. Furthermore, a separate section has been included which deals exclusively with service and accident prevention.

If, after reviewing this manual, anything is unclear or technical problems are encountered, contact the distributor from whom you purchased your machine for assistance. If there are any additional questions, feel free to contact our Customer Service Department at the address and/or phone number listed on the last page of this manual. Always have the model and serial number of your machine available to assist in obtaining the correct information.

IV. PURPOSE OF MANUAL

This instruction manual is intended to familiarize owners with the operation and safety procedures associated with your Cretors popcorn machine.

It is important that this manual be kept available to operating personnel.

A person who has not read and understood all operating and safety instructions is not qualified to operate the machine.

V. PRODUCT IDENTIFICATION

CRETORS POPCORN MACHINE DIPLOMAT MODELS: (SEE CONFIGURATOR SHEET)
DI20___-____-__
DI32___-____-__

VI. PRINCIPLES OF POPCORN MACHINE OPERATION

Theory and Observations of Popcorn Machine Operation

A. The efficient production of popcorn requires the presence of popcorn kernels, heat, and oil. The purpose of the oil is to distribute the heat throughout kernels evenly and quickly. If the heat is not distributed evenly and quickly, the kernels may burn instead of pop.

B. In order to pop corn in oil, the kettle, oil and parts near the heating elements are necessarily and unavoidably heated to temperatures high enough to pop popcorn. The temperature is controlled using a temperature control to maintain the kettle at an operating temperature of approximately:

KETTLE	SALTED CORN	SUGAR CORN
20 OZ.	410-420° F(210-215° C)	375-385° F. (190-193° C)
32 OZ.	410-420° F(210-215° C)	375-385° F. (190-193° C)

Contact with these surfaces will burn and scald you. Do not touch the kettle, oil or parts in direct vicinity of the heating elements.

C. The kettle is provided with an agitator to assist in the quick and even distribution of heat throughout the kernels.

The oil is heated to high temperatures in a kettle provided with electric heating elements to reach a proper popping temperature. An operator is required in the vicinity of the kettle only when handling corn or dumping popped corn from the kettle. Neither of these operations requires direct contact with the kettle. Direct contact with the hot oil, kettle, or heating elements could result in serious burns or scalds. Keep away from the kettle whenever possible. Use the handle when dumping the kettle, and use the provided cups when necessary to measure corn, oil and salt.

D. As the popcorn pops, it will push the lid open and discharge into the cabinet. When the corn finishes popping, the corn remaining in the kettle can be removed by holding the kettle handle in your right hand and rotating down in a clockwise direction to dump the kettle.

E. Your Diplomat model Cretors popcorn popper is equipped for a pump, which, when properly adjusted, automatically delivers the proper amount of oil to the popping kettle.

F. A cornditioner is provided and consists of a blower, heating element, and thermostat. The cornditioner circulates hot air through the corn stored in the popcorn case to keep the product fresh and crisp.

G. A two-stage filter system traps odor and smoke produced by popping corn. When the **Ventless Hood Option** replaces the two-stage filter system**,** the Ventless hood controls are integrated into the popping circuit. As such **the popper will not operate if the hood is not functioning**!

H. One Pop Option only allows the kettle to pop one batch of corn at a time and then shut down. The One Pop Option makes it impossible to leave a kettle heat turned on.

I. With the One Pop Option, the kettle heat switch is turned on; however, the kettle will not begin to heat until the One Pop button is pressed. When the One Pop button is pressed the green indicator light will go on, the kettle will begin to heat, and the kettle heat indicator light will turn on. The kettle will then heat until the temperature control opens at the end of the popping cycle. When the temperature control opens at the end of the popping cycle the kettle heat indicator light goes out and the heat turns off. The kettle will not begin to heat again until the kettle has cooled and the One Pop button is pressed.

J. If the machine is equipped with an oil pump, and the pump switch is turned on, pressing the One Pop button will begin the pumping cycle, as well as, the kettle heat cycle. (When cleaning the kettle and oil is not wanted, turn off the oil switch and the oil pump will not run.)

K. If the machine is equipped with the Salt/Sugar option, the operator moves the toggle switch to either the salt or sugar position for desired corn type. The oil volume will be set to the appropriate amount. In the salt position, the thermostat will turn off at the sugar temperature but a timer will allow the heat to remain on until the corn has finished popping.

L. With the Digital Temperature Control, the operator can adjust the set point of the popping cycle on the controller. There is no thermostat in side the kettle. Temperature of the kettle will also be displayed. To adjust, see service manual.

M. If the machine is supplied with the Giles Ventless Hood, refer to the Giles instruction manual for more details on the operation and components. UL / EPA testing requires that the popcorn machine will not operate if the Giles hood is not fully functional.

VII. CONTROL SWITCHES (Not all machines contain all of these switches.)

*KETTLE HEAT	-Turns the kettle heat On/Off. (See Exhaust for Ventless Option)
AGITATOR	-Turns the stirrer blade motor On/Off.
*EXHAUST	-Turns exhaust blower On/Off.
***Ventless Hood option**	-The exhaust switch must be turned on for the kettle to heat.
CORNDITIONER	-Turns the cornditioner blower and heat On/Off.
LIGHTS	-Turns interior lights On/Off.
OIL	-Provides power to the oil pump.
DELIVERY	-Initiates the pump cycle.
FUSE/CIRCUIT BREAKER	- Provides protection to all circuits, except the kettle.
ROTARY SWITCH	-Turns power On/Off to all circuits.
ONE POP	-Turns the kettle heat on and initiates pump cycle.
SALT/SUGAR	-Sets the pump and kettle temperature to proper settings.
DIGITAL CONTROLLER	-Displays and controls kettle temperature.

VIII. OPERATING INSTRUCTIONS

Do not attempt to operate your Cretors popcorn machine until you have read and understood this manual. Failure to do so may result in serious injury or death.

Do not attempt to operate your Cretors popcorn machine unless the installation instructions have been strictly adhered to. Failure to do so may result in serious injury or death.

Operate your popcorn machine only if it is in good sanitary condition (See **SANITATION INSTRUCTIONS**). Failure to do so may result in illness to your customers.

Always turn the kettle heat switch off when not popping corn. Failure to do so will cause residual remaining in the kettle oil to stain the kettle, possibly resulting in an unsanitary condition. A hot kettle may also cause a "flash" fire if oil is added to a kettle left unattended with the heat on, resulting in serious burns or death.

A. To operate your Cretors popcorn popping machine:

1. Fill the corn drawer with corn on floor models.
2. Fill the salt box and hang it on the inside edge of the corn drawer.
3. Connect and adjust the pump as explained in the installation instructions. Pre-heat the popping oil until liquid, if necessary.
4. If equipped, move Salt/Sugar switch to desired mode.

5. Fill the appropriate corn measure with corn and the salt measure with the salt, and empty these into the kettle. When making sugar corn, add the correct amount of sugar, rather than salt, with the measure for corn.

WARNING! Always add corn to the kettle before pressing the oil delivery button or adding oil. Failure to do so may result in the oil being heated too rapidly resulting in a fire.

Avoid contact with the kettle. Contact with a hot popping kettle may result in serious burns or scalds.

6. Close the kettle lid by pulling the kettle cover knob down.
7. Turn on the agitator, the exhaust fan, and then turn on the kettle heat and press the oil delivery button. For a ventless hood machine, the exhaust must be turned on and be functional for the popper heat to function. When the exhaust switch is turned on, an audible alarm will sound for a few seconds, clicking will be heard, and then the machine will be operational. If the Giles hood will not run, the popping circuit will be disabled until the problem is resolved.
8. If machine is supplied with the **One Pop** option, press the One Pop button to begin the popping cycle and oil delivery.

WARNING! After the first popping the kettle is hot. Avoid contact with the kettle when adding corn or salt. Failure to do so may result in serious burns or scalds.

Measuring cups have been provided to accurately measure the proper amounts of popcorn, salt and oil. The correct amount for each popping is:

SALTED CORN

	VOLUMETRIC MEASURE		
Kettle Size	Corn	Oil	Salt
20 oz.	20 oz. 591 ml	6.5 oz. 192 ml	2 tsp. 10 ml
32 oz.	32 oz. 946 ml	10.5 oz. 310 ml	3 tsp. 15 ml

SUGAR CORN

	VOLUMETRIC MEASURE		
Kettle Size	Corn	Oil	Sugar
20 oz.	12 oz. 351 ml	4.25 oz. 122 ml	8.25 oz. 245 ml
32 oz.	19.5 oz. 577 ml	7.5 oz. 225 ml	15.25 oz. 451 ml

9. As the corn pops, it will push the lid open. When the lid has moved about one and one-half inches, it will open completely, allowing the corn to discharge from the kettle. When the corn finishes popping, dump the kettle by pulling the large black handle down as far as it will go. (Popping is considered finished when there are about four seconds between pops). When the pan is empty, return the handle to its upright position.

Avoid contact with the kettle when dumping popped corn. Failure to do so may result in serious burns or scalds.

10. Repeat steps 4-9 as desired, adding corn to the corn drawer and salt to the salt box as necessary.
11. When the oil container is empty, replace with a new full container of oil. See Pump Instruction manual.

    NOTE: The ideal time for maximum volume (corn expansion) is between 2-3/4 to 3-1/2 minutes from the time the corn is placed into the kettle until the time it is dumped. Check the popping time after several popping cycles. The pilot light should turn off approximately 10-20 seconds before the corn finishes popping. If this is not the case, please refer to the "Troubleshooting" section in your Service Manual.

IX. SANITATION INSTRUCTIONS

Be certain the machine is turned off and power is unplugged before sanitizing this machine unless a specific cleaning procedure requires power to the machine. Failure to do so could result in injury or death.

Do not clean heated surfaces until they have been given sufficient time to cool. Failure to do so may result in serious burns or scalds.

A. Popping Kettle

1. The Cretors kettle is designed to be cleaned in place. There is no need to remove the kettle for cleaning.

   Do not immerse an assembled kettle in water. This will damage the electrical components and may cause short circuits resulting in electrical shock hazard if power is applied.

2. Do not use steel wool or other similar abrasives to clean the nickel plated kettles, as they will ruin the kettle by removing the nickel platting. Stainless steel kettles can be cleaned aggressively.
3. Do not clean the kettle with power connected unless you are boiling the CKC cleaning compound to clean the inside of the kettle. Follow instructions in step 6.

   Do not attempt to clean a hot kettle. Failure to do so may result in serious burns or scalds.

   Do not throw ice into a hot kettle. Doing so can cause damage to the pan and invalidate the warranty.

4. The kettle either has a polished nickel finish or is a polished stainless steel finish and is very easy to clean if oil is not allowed to burn. After the final popping, the best practice is to wait until the oil just begins to solidify, then take a cotton towel or absorbent rag and wipe the kettle. Once the oil is allowed to completely solidify, it can become more difficult to remove. We recommend coconut oil for your Cretors popper; it will not stick or burn as easily as other oils.
5. A thorough cleaning every week with CKC cleaning compound is recommended. This will prevent the accumulation of carbon on the bottom and internal sides of the kettle. When boiling the CKC cleaning compound in the kettle, do not fill the kettle with more than ¾" high of water inside the kettle. If the kettle has been overheated or oils that tend to carbonize are used the normal cleaning procedures may not suffice. Increase frequency as needed.

Cretors has developed a cleaning kit for your Diplomat machine. The kit is sold separately under P/N 10831. If you need more information, please feel free to contact your local distributor or call Cretors at 1-800-228-1885.

6. Cretors Outside Kettle Cleaner COC should be used periodically to remove popping oil that may become baked on to the outside of the kettle.
7. The kettle agitator assembly should be removed weekly for thorough cleaning. The stirrer blade is disassembled by removing the spring pin that goes through the top of the stirrer blade. Lift off the stirrer blade.
8. Clean all parts thoroughly, making sure to use CKC. Do not use any harsh abrasives or cleaning materials.
9. In addition to CKC and COC Cretors has two very effective aerosol cleaners available. Carbon OFF in the blue can is to be used to clean a cold kettle. The red can should be used with a warm kettle. Read the directions on the cans.
10. Reassemble in reverse order, following the directions given.

B. Cabinet

1. Remove and empty the waste clean-out drawer daily or whenever it is full. Under heavy use this may need to be done more often.

Failure to empty the drawer and to clean cabinet may result in a fire hazard due to restricted airflow from the cornditioner.

2. The cabinet glass and cabinet base can be cleaned with any good grade glass or household cleaner suitable for glass and plastic surfaces. The inside of the cabinet can be cleaned with the same cleaner as the outside, if it is the type that has a cleaning agent to cut the oil remaining from the popping operation, and it is acceptable for food contact surfaces. Do not soak unit with water. Avoid wetting the inside of electrical enclosure.

3. The doors can be cleaned with Cretors' Plastic Polish. This product is specially formulated to clean plastic doors. Do not use cleaners that have ammonia or alcohol. The use of these cleaners will cause the doors to become brittle and crack.
4. Counter model Diplomats require the installation of 4" legs, which are included with this unit. The use of the 4" legs is to conform with food sanitation regulations.
5. The popper case bottom of should be removed at least weekly to thoroughly clean the air chamber beneath. When cleaning the 48", 60" and 72" cabinets, empty the scraps in the hot air well by removing the clean-out drawer from under the popper case bottom and sliding it under the hot air well. Pull out the clean-out slide and the scrap will fall into the scrap drawer. Dispose of the products found in the popper case bottom, and replace the clean-out slide and the clean-out drawer.
6. Grease filters should be checked and cleaned weekly. They can be washed in a sink with hot soapy water or can be run through a dishwasher. Charcoal should be replaced when the holder is shaken and the charcoal is no longer free to move. Disposable filters should be discarded and replaced once filters begin to become saturated but before grease starts to drip.
7. Ventless hood filters need to be cleaned and replaced regularly, see manual for recommended schedule and procedures. Care and caution needs to be taken when cleaning filters as to not damage them, especially the electrostatic filter.

This appliance should not be cleaned with a water jet.

This manual is filled with time-saving and money-saving information regarding your Cretors popcorn popper. There is nothing, however, more important than the safety aids and warnings found throughout this document.

If you have any questions regarding the operation or cleaning of your Cretors popcorn popper, contact your local distributor. Should you have any difficulties or are unable to reach them, feel free to contact the Customer Service Department at C. Cretors and Company.

Additional copies of this manual can be obtained from C. Cretors and Company at the address listed below. Please provide the model and serial number when requesting additional copies of this manual. There will be a nominal charge for additional copies.

Cretors guarantees this machine to be free of defects in parts, materials and workmanship for two years. Please take this time to fill out the factory registration card and return it to the factory to activate your warranty. If you have any questions concerning the Cretors' warranty, please contact your local distributor or the Customer Service Department at C. Cretors and Company.

C. CRETORS AND COMPANY
3243 N. CALIFORNIA AVENUE
CHICAGO, IL 60618
PHONE (773) 588-1690, (800) 228-1885, FAX (773) 588-2171
WEB SITE: http://www.cretors.com Email: postmaster@cretors.com

Appendix A

Cretors' elevator corn storage option

I THEORY AND OBSERVATIONS OF MACHINE OPERATION

The elevating corn storage option is designed to allow operators to easily adjust the level of popped corn in the heated storage bin for easy access. The cabinet is provided with a cornditioning system which circulates heated air to keep popcorn warm and crisp. The handle on the outside of the unit is easily turned to raise or lower the poppercase bottom height. This reduces corn breakage and eliminates the need for the operator to reach down into the storage area when the level of popped corn is dropped. The handle may be replaced by a switch if equipped with the motorized elevator option.

II CONTROL SWITCH

TOGGLE SWITCH -Raises and lowers the bin height (motorized model only)

III OPERATING INSTRUCTIONS

1. The height of the bin should be adjusted to the level to hold the amount of corn popped in the cabinet to maximize the efficiency of the cornditioning system.
2. The bin level is lowered by pulling and holding out the knob handle while turning the handle clockwise. It is raised by turning counter-clockwise. The bin level can be "locked in position" by releasing the knob handle so that the pin will rest against the underside of the frame. One revolution will raise or lower the bin level by approximately 4 inches.

3. If equipped with the motorized option, the bin level is adjusted by pressing down on the elevator switch to lower and up to raise.

VI SANITATION AND MAINTENANCE INSTRUCTIONS

Emptying the Clean Out Drawer

Remove and empty the clean out drawer daily, or whenever it is full. Under heavy use, this may need to be done more often. The clean out drawer is found under the bin. Doors may or may not need to be removed to expose the cleanout drawer.

Cleaning Beneath the Popper Case Bottom

Clean the interior of the warming cabinet and beneath the popper case bottom, at least once a week. This is done by lifting out the popper case by the handles off the arms. Replace when finished. At least monthly, the divider should be removed by lifting up and out and the rest of the bin can be cleaned. While the divider is removed, the chain should be lightly lubricated with food grade grease. Replace when finished. The bottom of the divider is located between two pins or a pin and the shaft at the bottom of the warming cabinet.

Appendix B

Diplomat Self Serve

I THEORY AND OBSERVATIONS OF MACHINE OPERATION

The Diplomat Self Serve™ Cabinet is designed to allow customers to access popped corn and topping for themselves. The cabinet provides popped corn and topping storage, and a cornditioner circulates heated air to keep popcorn fresh. Popcorn is distributed through chutes on the front of the unit when the slide gate is pulled open, oil topping is available between the two popcorn delivery points. Oil is delivered with the push of a button.

II CONTROL SWITCHS

LIGHT SWITCH	-Turns lights and sign(s) ON/OFF
CORNDITIONER SWITCH	-Turns cabinet heat and blower ON/OFF
PUMP SWITCH	-Turns topping pump and oil warmer ON/OFF

III OPERATING INSTRUCTIONS

4. This cabinet is designed to warm and dispense popcorn and oil topping. Do not use warmer to heat or hold any other products.

5. Controls are located on the operator side of the machine above eye level.

6. The lighted sign and cabinet lights are turned ON/OFF by pressing the switch marked “Lights.”

7. The cabinet heat and blower are turned ON/OFF by pressing the switch marked “Cornditioner.”

8. The topping oil pump and oil heater are turned ON/OFF by pressing the switch marked “Pump.”

Operate your warmer only under sanitary condition (SEE SANITATION INSTRUCTIONS).

Installing the Oil Topping Bag

Use only liquid topping oil. Oil which is not in liquid form will clog the oil pump. If other types of topping are to be used, the pump will need to be changed. Contact your distributor or Cretors for more information.

1. If the topping bag is within a box, carefully remove it. Be sure to avoid puncturing or cutting the bag. If the bag is broken, discard; the bag must not be torn or pierced.

2. Carefully place the oil topping bag into the heated butter shelf, avoiding damage to the bag.

If the bag is ever broken in the machine, be sure to clean up the spilled oil immediately, to avoid contamination.

3. Remove the travel cap from the bag spout. The travel cap prevents dirt and dust from coming into contact with the internal slider for sanitary hook-up.

4. Snap the locking plate of the connector over the bag spout. The tapered probe on the connector is then pushed into the bag spout and locks into place. This bi-directional locking action does two things: One, it eliminates any possibility of accidental disconnect, giving the user a "foolproof" positive connection. Two, it opens the channel, allowing product to flow.

5. When the bag is empty: Disengage the connector, snap the connector probe into the out position, and remove it from the bag spout. This disconnects and reseals the bag. All product contact surfaces are protected, ensuring a sanitary situation.

6. No disassembly of connector is required when switching from one oil topping bag to another. Repeat steps 1 – 4 to properly re-connect oil topping bag to pump.

*NOTE: Prior to each attachment of oil topping bag, ensure that the probe has not been contaminated. If this has occurred, clean the connector as described in **Sanitation Instructions**.

Filling the Cabinet

1. Slide open one side of the Plexiglas doors and fill the warmer with popcorn through the back.

Do not fill the warmer with popcorn higher than the base of the doors; doing so may put unnecessary strain on the auger motor, or cause jamming.

2. Close doors.

Operation

1. Be sure all switches are turned ON.

2. Dispense popcorn from the warmer by placing an open popcorn bag or box beneath either popcorn chute on the front of the machine. Pull the spring-loaded slide out. The auger will turn to dispense the popcorn. To close, slide the door gently back.

3. Oil topping is dispensed from the middle front of the warmer. Place the popcorn bag or box beneath the spout and press the large dispense button.

VI SANITATION INSTRUCTIONS

Be certain all switches on the machine are turned "OFF" and power is unplugged before sanitizing this machine. Failure to do so could result in injury.

CAUTION: HOT. Do not clean appliances until they have been given sufficient time to cool. Failure to do so may result in serious burns.

Emptying the Clean Out Drawers

Remove and empty the clean out drawers daily, or whenever they are full. Under heavy use, this may need to be done more often.

Failure to empty the drawers may result in a fire hazard due to restricted airflow from the cornditioner.

Cleaning the Cabinet

The cabinet should be cleaned with a damp cloth and any good grade glass or household cleaner suitable for glass and plastic surfaces. A cleaning agent that is acceptable for food contact surfaces is recommended. Do not soak unit with water. Avoid wetting of inside of electrical enclosure.

1. Clean the interior and exterior of the cabinet.
2. Allow cabinet to dry fully.

Cleaning the Cabinet Doors

The doors can be cleaned with Cretors' Plastic Polish. This product is specially formulated to clean plastic doors. Do not use cleaners that have ammonia or alcohol. The use of these cleaners will cause the doors to become brittle and crack.

1. Lift the Plexiglas doors from their tracks.
2. Clean the tracks and the doors.

Cleaning Beneath the Popper Case Bottom

Clean the interior of the warmer, beneath the popper case bottom, at least once a week.

Failure to clean beneath the popper case bottom may result in a fire hazard due to restricted airflow from the cornditioner.

1. The auger is held in place by spring tension. One end has a sliding drive head and the other has a hook. Remove each corn auger by compressing the auger coil and removing the auger drive head from its seat at the rear of the warmer. Raise the drive head end of the auger and disengage the hook above the discharge chute. Clean each auger similar to cleaning the cabinet (see **Cleaning the Cabinet**).

2. Remove the two, popper case bottoms using the handle lifts at their sides. Clean each bottom similar to cleaning the cabinet (see **Cleaning the Cabinet**).

3. The interior beneath the popper case bottom should be cleaned similar to the cabinet (see **Cleaning the Cabinet**). Be sure to clear the blower vents of debris.

4. Return the popper case bottoms and augers to their previous positions.

Cleaning Oil Topping Connector

Once a week, the oil topping connector should be thoroughly cleaned.

1. Remove the probe body from the bag clamp by spreading the body clamp tabs, sliding the clamp body tabs and the probe body out.

2. Remove from tubing.

3. Remove the probe spout adapter from the probe body by unscrewing the stem from the probe body. Use a screwdriver to do this.

4. Remove the seal body and spring from the stem and nut assembly by unsnapping seal body from the stem.

5. Clean all parts in accordance to NSF and local requirements (warm, soapy water, and rinse). Do not use petroleum base cleaning agents or abrasive cleaners. Damage to sealing surfaces may occur and jeopardize the sanitary integrity of the connector.

6. Inspect the three “O” rings for damage or imbedded particles. Replace as required.

7. Reassemble by reversing steps 1 – 4.

Flushing the Oil Delivery System

The oil topping delivery pump is a closed system and should remain aseptic. If you believe your pump system to be contaminated, then you will need to clean the system. Instructions for cleaning the connector are listed above. Instructions for cleaning the pump are listed below.

1. Remove the oil topping bag by disengaging the connector, snapping the connector probe into the out position, and removing it from the bag spout. This disconnects and reseals the bag.

2. Remove the connector from the oil tube.

3. Place the end of the tube into warm, soapy water in a pail.

4. Plug in the warmer and turn the pump switch to "ON." Be sure the other switches are set to "OFF."

CAUTION: Do not spill water into the warmer. Doing so could result in injury.

5. Cycle the pump sufficiently to flush system by pressing the mushroom dispense button on the front of the warmer. Be sure to have a container to catch the water at the discharge spout beneath the button.

6. Place the end of the oil tube into clean, warm water in a pail.

7. Cycle the pump long enough to completely rinse soap from the system.

8. Remove tube from the clean water, and cycle pump to clear lines.

Cleaning the Oil Topping Heater Shelf

Once every month (unless a spill has occurred), clean the heater shelf similar to the cabinet (see **Cleaning the Cabinet**).

Sanitation of your popcorn machine and oil pump is imperative for production of an appetizing product. Failure to follow proper sanitation procedures for food contact surfaces or usage of contaminated ingredients (salt, oil, seasonings) could result in poor product quality and may cause illness to your customers. Use pure ingredients, always emphasize machine sanitation, and follow the sanitation procedures outlined in this manual to protect the welfare of your customers.

176 MITTEL DRIVE, WOOD DALE, IL 60191

DIGITAL DIPLOMAT 20 and 32 oz POPCORN MACHINE SERVICE MANUAL

120/208 - 240 Volt,
Single and Three Phase, 60 Hz

230 Volt,
Single Phase, 50 Hz

400 Volt, 3N~,
Three Phase, 50 Hz

100/200 Volt,
Single Phase, 50 & 60 Hz

Included in this manual:
***One Pop Option**
***Salt/Sugar Option**
***Ventless Hood Option**

READ and **UNDERSTAND** these servicing, and safety instructions before servicing this popcorn machine

TABLE OF CONTENTS

I. Safety Alert Symbol 3

II. Safety First 3

III. Introduction 3

IV. Specifications 5
- A. Electrical Specifications
- B. Size Specifications

V. Purpose of Manual 6

VI. Installation Instructions 6
- A. Location
- B. Power Supply
- C. Connecting Machine to the Power Supply
- D. Pump Installation
- E. Counter Model Installation 7
- F. Ventless hood Model Installation 7

VII. Service Instructions 7
- A. Parts
- B. Kettle Temperature Control
  1. Temperature Control Operation
  2. Digital Temperature Control Adjustment 8
  3. Checking Temperature Control. 9
  4. Salt Timer Adjustment
  5. Salt/Sugar with One Pop Adjustment 10
- C. Kettle High Limit Temperature Control
- D. Kettle Removal
- E. Kettle Installation 11
- F. Kettle Alignment
- G. Kettle Return Spring Adjustment 12
- H. Replacing Damaged Oil Discharge Tube
- I. Giles hood maintenance

VIII. Troubleshooting. 13

I. SAFETY ALERT SYMBOL

The symbol shown below is used to call your attention to instructions concerning your personal safety and the safety of others. Watch for this symbol. It points out important safety precautions and procedures. It means **ATTENTION**! **Become Alert**! **Your personal safety is at risk!** Read the message that follows and be alert to the risk of personal injury or death.

II. SAFETY FIRST

The information in this manual is essential for safe installation and service of your Cretors popcorn machine. The manual must be read and understood before installing, or maintaining equipment, or equivalent training must be provided.

"The employer must instruct each employee in the recognition and avoidance of unsafe conditions, regulations applicable to his work environment to control and eliminate any hazards or other exposure to illness or injury."
Ref.: 29 CFR 1926.20 (b)(4)(a)(2)

It is understood that safety rules within individual companies vary. If a conflict exists between the safety procedures contained in this manual and the rules of a using company, the more stringent rule should take precedence.

The purpose of equipotential bonding studs, terminals and systems is to join together the metalwork in a product, whether it needs to be grounded or not, so every point is at the same potential/voltage. This bonding is not intended to provide grounding (a separate low resistance ground-fault current path back to the source).

III. INTRODUCTION

This manual is filled with timesaving and money-saving information regarding your Cretors popcorn machine. There is nothing, however, more important than the safety aids and warnings that are found throughout this document. The Safety Alert Symbol is used to identify topics of primary safety concern wherever they appear. A separate section has been included which deals exclusively with operation and accident prevention.

If, after reviewing this manual, anything is unclear or technical problems are encountered, contact the distributor from whom you purchased your machine. For assistance and if there are any additional questions, feel free to contact our Customer Service Department at the address and/or phone number listed on the last page of this manual. Always have the model and serial number of your machine available to assist in obtaining the correct information.

Model	Kettle	Voltage	Corn	Control	Cabinet	Sign	Sign Position	Cust Doors	Features
DI	Diplomat								
	XX -- No Kettle								
	20 -- 20 Oz. Kettle								
	32 -- 32 Oz. Kettle								
		60 Hz (North America)							
		A -- 120/1/60 (XX Option Only)							
		H -- 120/208-240/1/60							
		K -- 230/3/60							
		Q -- 120/208/3/60							
		R -- 230/1/60							
		S -- 230/380/3N/60							
		50 Hz							
		E -- 230/1/50							
		G -- 400v 3N / 50 CE							
		N -- 240/415/3/50							
		Japan							
		I -- 100/200/1/50							
		J -- 100/200/1/60							
		P -- 100/200/3/60							
			X -- Not Apply						
			1 -- Salted Corn						
			2 -- Sugar Corn						
			3 -- Salt & Sugar Corn (Order Salt / Sugar Pump)						
				X -- Standard Control					
				O -- One Pop Control					
				C -- One Pop with Counter					
				D -- Digital Control					
				E -- Digital One Pop					
				F -- Digital One Pop with Counter					
					C -- 3' Counter Model			H,E,G	
					F -- 3' Floor Model			H,E,G	
					4 -- 4' Floor Model			H,E,G	
					5 -- 5' Floor Model			H,E,G	
					9 -- 5' Floor Model Twin poppers			H,S,E,G	
					6 -- 6' Floor Model Single Popper			H,E,G	
					7 -- 6' Floor Model Twin poppers			Q,M,G	
					10 -- 6' Pop-N-Roll Twin Poppers			Q,M,G	
					8 -- 4' Self Serve Counter Model			H,E,G	
						X -- No Lighted Sign			
						1 -- Fluourescent Sign			
						2 -- Red Neon Sign 10378			
						3 -- Red & White Neon Sign			
						4 -- Blinking Red & White Neon Sign 10479			
						5 -- Light box only / No sign			
							X -- Not Apply		
							O -- Operator Merchandising (Not available on 4" Cabinet)		
							C -- Customer Mercahndising		
								X -- No Customer access	
								1 -- Wing Door Customer Side	
DI									
Model	Kettle	Voltage	Corn	Control	Cabinet	Sign	Sign Position	Cust Doors	**X -- No Custom Features**
									C -- Custom Features
									A -- Installed Ansul system
									SS -- Stainless Steel 32 Oz. Pan
									SR -- Short Side Glass Right
									SL -- Short Side Glass Left
									N -- NSF Doors 4',5', and 6' Cabinets
									V -- Ventless Hood
									Z

IV. SPECIFICATIONS

A. Electrical Specifications:

Diplomat Models are available in any of the following electrical configurations:

120/208 - 240 Volts, Single and Three Phase, 60 Hz
230 Volt, Single Phase, 50 Hz
400 Volt, 3N~, Three Phase, 50 Hz
100/200 Volt, Single Phase, 50 or 60 Hz

B. Size Specifications:

MODEL DI20	**DIPLOMAT 20 OZ. ELECTRIC COUNTER MODEL**
Capacity:	20 oz. Kettle, 400 one-ounce servings per hour
Power:	4200 watts
Dimensions:	28"D x 36"W x 45-1/2" H - - 71 cm D x 91 cm W x 116 cm H
Net Weight:	189 lbs. (86 kg.)
MODEL DI32	**DIPLOMAT 32 OZ. ELECTRIC COUNTER MODEL**
Capacity:	32 oz. Kettle, 640 one-ounce servings per hour
Power:	5100 watts (Stainless Steel kettle model 5650 watts)
Dimensions:	28"D x 36"W x 45-1/2" H - - 71 cm D x 91 cm W x 116 cm H
Net Weight:	189 lbs. (86 kg.)
MODEL DI20	**DIPLOMAT 20 OZ. ELECTRIC FLOOR MODEL**
Capacity:	20 oz. Kettle, 400 one-ounce servings per hour
Power:	4200 watts
Dimensions:	28"D x 36"W x 74"H - - 71 cm D x 91 cm W x 188 cm H
Net Weight:	390 lbs. (177 kg.)
MODEL DI32	**DIPLOMAT 32 OZ. ELECTRIC FLOOR MODEL**
Capacity:	32 oz. Kettle, 640 one-ounce servings per hour
Power:	5100 watts (Stainless Steel Kettle model 5650 watts)
Dimensions:	28"D x 36"W x 74"H - - 71 cm D x 91 cm W x 188 cm H
Net Weight:	390 lbs. (177 kg.)
MODEL DI32	**DIPLOMAT 32 OZ. ELECTRIC 5′ FLOOR MODEL**
Capacity:	32 oz. Kettle, 640 one-ounce servings per hour
Power:	6800 watts (Stainless Steel Kettle model 7350 watts)
Dimensions:	28"D x 60"W x 74-5/8"H - - 71 cm D x 154 cm W x 186 cm H
Net Weight:	425 lbs. (193 kg.)
MODEL TDI32	**TWIN DIPLOMAT 32 OZ. ELECTRIC 6′ FLOOR MODEL**
Capacity:	2 - 32 oz. Kettle, 640 one-ounce servings per hour
Power:	First popper 6800 watts – second popper 5100 watts (Stainless Steel Kettle, First Popper 7350 watts, Second Kettle 5650 watts)
Dimensions:	28"D x 72"W x 74-5/8"H - - 71 cm D x 183 cm W x 186 cm H
Net Weight:	610 lbs. (277 kg.)

PURPOSE OF MANUAL

This instruction manual is intended to familiarize owners with the servicing and safety procedures associated with your Cretors popcorn machine. This manual should be kept available to maintenance personnel.

VI. INSTALLATION INSTRUCTIONS

A. Location

Choose a location for your Cretors popcorn machine that maximizes the ease of operation and maintenance procedures. Be sure to check your local building and fire codes for location restrictions.

B. Power Supply

1. Check the nameplate to determine the required power supply.

Connect your popcorn popper only to the correct power source. Failure to do so may result in personal injury or death and may damage your popper.

2. C. Cretors and Company recommends dedicated circuits for the Diplomat model popcorn machine. The Diplomat model poppers require a dedicated circuit to avoid a voltage drop in the supply wiring. Check your local electrical codes regarding fuse or circuit breaker requirements.

Make certain your popcorn machine is properly grounded. Failure to do so may result in damage to your equipment or present a shock hazard.

C. Connecting your Machine to the Power Supply

1. Make certain that the power supply circuit breakers are in the off position.

2. Push the plug completely into the receptacle. If the cord has a twist lock plug be sure to turn to the lock in position.

3. If the supply cord is damaged, a Cretors approved service agent, or a qualified Cretors employee must replace it in order to avoid a hazard.

D. Pump Installation (and Pump Timer Adjustment for Salt/Sugar Machines)

Refer to the Service Manual included with the pump to be installed in the machine. When the Diplomat is equipped with the Salt/Sugar option, also see below for additional information.

1. For the Salt/Sugar machine the pump timers are located in the machine not in the pump. One timer is marked “Salt,” the other “Sugar.”
2. On the 3′ Diplomats the timer is located under the wire cover below the popper case bottom.

3. On the 4′, 5′, and 6′ machines the timers are located on the top of the machine under the cover. They will be marked "Salt/Sugar Timer."

4. To adjust the pump time, use the following procedure:

   a. There are two adjustments on the timer. The small adjustment knob sets the maximum time the timer can run. Cretors will normally set this adjustment for 10s.

      10s = 0-10 seconds
      1m = 0-1 minute
      10m = 0-10 minutes

   b. The larger adjustment knob sets the actual run time (percentage of time allowed by the small adjustment knob). Example: If the maximum setting is set for 10s and the large knob is set at .9, the timer will run for 9 seconds. Adjust to taste for both timers.

E. Counter Model Installation

The Counter Model Diplomats have 4′ legs, which must be attached at the time of installation. The legs are required to comply with Sanitation Standards.

F. Ventless Model Installation

The Ventless hood Model Diplomats have the Giles ventless hood integrated into the popper. If the hood is not functioning, neither will the popper. Once the machine is plugged in, turn on the "exhaust switch". When the Ventless Hood is first turned on it goes through a self check process. The hood will sound an alarm and then the alarm should shut off. Once the hood is operational, the rest of the machine functions as normal. Also refer the Giles hood instruction manual for additional information on operation and service.

G. Ansul Installation

An Ansul service technician must be called out to activate the system at start up. There will be no power to the machine until this is done.

VII. SERVICE INSTRUCTIONS

In the case of improper operation, only a qualified person should perform the following diagnostic checks, and, if necessary, corresponding adjustments and repairs. Many of the following procedures may present an electrical shock hazard and can cause serious injury or death.

Perform work only on de-energized circuits. Failure to do so may lead to electrical shock resulting in personal injury or death.

A. Parts

When ordering parts, refer to the parts diagram included in this manual. Always supply the serial number, model number, and voltage of your popcorn machine.

B. Kettle Temperature Control

1. TEMPERATURE CONTROL OPERATION

a. A digital temperature control is installed as a safety device to prevent the overheating of the kettle if the machine is left unattended momentarily while in operation. The digital Temperature Control senses kettle temperature from a thermocouple mounted on the bottom of the pan. The kettle indicator light indicates the operation of the temperature control. The indicator light is located on the support column or on the ceiling of the cabinet near the support column. The indicator light should stay on for most of the popping cycle. The indicator light will turn off 10-20 seconds before the corn finishes popping and the kettle is dumped. If the indicator light turns off 30 seconds or more before the corn finishes popping, the digital temperature control is set too low and in need of adjustment. If the indicator light remains on after the corn has finished popping the digital temperature control is set too high.

CAUTION: If the corn has dried out, it will not finish popping at normal temperatures and the light will go out early. DO NOT ADJUST KETTLE TEMPERATURE BASED ON POOR QUALITY CORN.

CAUTION: Setting the kettle temperature too high (over 500°F 260°C), can cause a serious fire hazard.

b. Salt/Sugar Option: The indicator lights on the column switch plate will reflect whether the Salt/Sugar switch is in the sugar mode or salt mode. When the Salt/Sugar switch is in the sugar mode, the digital temperature control alone controls the heat. When the switch is on the salt side the digital temperature control works the same way with one exception, when the digital temperature control opens, it activates a timer which allows the heat to stay on, allowing the corn to finish popping.

2. DIGITAL TEMPERATURE CONTROL ADJUSTMENT

CAUTION: If the machine is equipped with the Salt/Sugar option, the temperature control should **only** be adjusted when the switch is in the sugar mode. When in salt mode, refer to "Salt Timer Adjustment" section.

a. Press the "set" button.

b. Use the up or down arrow buttons to adjust the temperature up or down.

c. Press the "set" button again. (Note that for safety, this range is limited)

d. The display will show the temperature go up and down.

e. You should only raise or lower the temperature 5-10°F at a time.

f. Set temperature so that the power to heat elements is shut off at the correct temperature.

KETTLE	SALTED CORN	SUGAR CORN
20 OZ.	410-420° F(210-215° C)	375-385° F. (190-193° C)
32 OZ.	410-420° F(210-215° C)	375-385° F. (190-193° C)

3. CHECKING TEMPERATURE CONTROL

There are two ways of checking that the temperature control is set correctly.

a. Place a pyrometer over the thermocouple position and turn the kettle heat on. Watch to see that the kettle heat shuts off at the correct temperature. Make adjustments as needed.

b. The temperature control may be adjusted by observing the operation of the indicator light as described in the "Temperature Control Operation" section. Adjust the temperature control so that the kettle heat shuts off 10 to 20 seconds before the corn finishes popping and the kettle is dumped.

Do not adjust the temperature so high that the pan smokes at the end of the popping cycle. If set too high (over 500°F or 260°C), the kettle can become a serious fire hazard.

c. Observe two or three cycles of correct operation to be certain everything is working correctly. Your final setting should allow the indicator light to cycle off 10 to 20 seconds prior to dumping the kettle.

4. SALT TIMER ADJUSTMENT

For the Salt/Sugar machine, the salt timer is located on the top of all Diplomats under the top cover marked "Salt Timer." If the machine pops sugar corn fine but there is a problem with salted corn, see below.

a. If the indicator light turns off 30 seconds or more before the corn finishes popping, the timer is set too low and is in need of adjustment.

b. There are two adjustments on the timer. The small adjustment knob sets the maximum time the timer can run. Cretors will normally set this adjustment for 1m.

10s	= 0-10 seconds
1m	= 0-1 minute
10m	= Caution: Never set the timer to 10m

c. The larger adjustment knob sets the actual run time (percentage of time allowed by the small adjustment knob). Example: If the maximum setting is set for 1m and the large knob is set at .5, the timer will run for 30 seconds. In this case, the heat will stay on 30 seconds after the thermostat opens.

5. SALT/SUGAR WITH ONE POP ADJUSTMENT

a. If the Salt/Sugar switch is in the sugar position, use the "Digital Temperature Control Adjustment" section.

b. If the Salt/Sugar switch is in the salt position, the temperature is adjusted on the One Pop Timer/Relay.

c. On the Relay there are dipswitches very similar to the timer in our 7700-7900 pumps.

d. From the factory the dipswitches 7 and 9 will be on. To turn the dipswitches ON the dipswitch needs to be pressed down to the number side opposite of the open side.

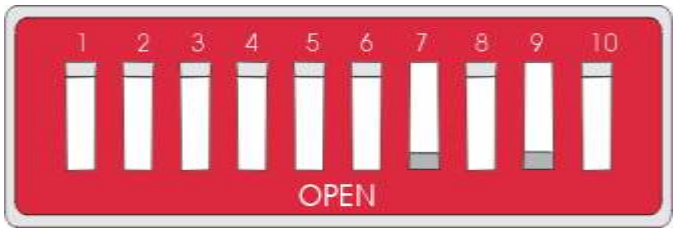

Switch #6 = 5 seconds
#7 = 10 seconds
#8 = 20 seconds
#9 = 40 seconds

Example: If you turn #7 and #9 on, the time delay will be 10 plus 40 or 50 seconds.

C. Kettle High Limit Temperature Control

a. The kettle high temperature control system is completely redundant system to the digital temperature control. The High limit control controls a second relay which is wired in series with the relay controlled by the digital temperature control.

b. Cretors "CE" marked machines have been supplied with high limits since 1990 to comply with the European Directives these high limits were not resetting. Once they trip, they must be replaced. Beginning July 2008, the CE marked machines began using the same high limit used in non CE marked machines (cpn14593). These high limits will reset when the temperature falls below their set point. In order to comply with the CE directive a latching relay (cpn 14942) has been added to the control circuit. If the high limit opens the relay will keep the kettle power off until it is reset. The relay is reset by turning off the power to the machine. This is done by turning the rotary switch off and back on or powering the unit off at the main breaker.

CAUTION: If high limit continually trips, check for a problem with the kettle temperature control, temperature setting of the temperature control or the timer setting of the sweet/salt timer

c. Beginning in May of 2006 UL requires that all cooking machines have auto-resetting thermostats. Cretors and Company has started implementing auto-resetting high limits into our repair kettle assemblies as well. Again, the end customer/user will not see any difference in the operation of their machine but there is now an added level of safety so that the kettle temperature will not be able to exceed a safe level, even if the normal operating thermostat or temperature controller is adjusted to an unsafe level. This high limit is preset and is NOT to be adjusted for any reason. Tampering with the high limit will void all warrantees. New wiring diagrams will be sent out with the new kettle assemblies for reference.

D. Kettle Removal

To remove the kettle assembly, perform the following operations:

1. Unplug the popcorn machine from the power supply. Make sure the kettle is not hot.

2. Remove the retainer patch from around the dump shaft.

3. Remove the hex screws on the bottom of the retainer and remove the retainer.

4. Disconnect the lead wires from the mica terminal plate. If digital, also remove thermocouple wires.

5. Loosen the two square-head setscrews that hold the kettle support plate(s) to the support shaft.

6. Slide the kettle off of the support shaft.

Use proper lifting techniques when removing the kettle assembly to avoid injury to back.

7. If wires must be replaced, be sure to use nickel wire supplied by Cretors. Conventional copper or "stove" wire will have a limited life.

8. When removing nuts and spacers from the threaded studs on the bottom of the pan, do not wipe off the silver lubricant. Without the lubricant (NEVER SEEZ) the nuts may freeze on the studs and cause the studs to break when the nuts are turned, in an attempt to remove them.

E. Kettle Installation

1. When re-assembling the kettle, be sure all nuts and bolts are tight. Check to make sure that all electrical connections are secure. A loose connection can heat up and burn off the wires.

2. Check the kettle support bar to be sure that it is level.

3. Locate the kettle so that the drive shaft lines up with the blade center, and tighten the bolts on the kettle support plate/(s) that hold the kettle in place.

4. Turn on the agitator and dump the kettle. If the drive shaft does not engage and dis-engages freely, readjust the kettle. Under normal circumstances if the kettle was aligned before it was removed, the only adjustment needed is to slide it in or out along the support shaft until the drive shaft is aligned with the blade center. In severe cases it may be necessary to make further adjustments, see "Kettle Alignment" section for instructions.

5. When the drive shaft engages and disengages freely, securely tighten the other bolts that are holding the pan.

6. Replace the retainer and the retainer patch.

F. Kettle Alignment

1. Begin by checking to see if the kettle support bar is level. With the kettle removed, apply slight downward pressure on the dump handle to simulate the weight of the pan. Measure the distance from the top of the bar to the top of the cabinet at both the tip and at the base near the support column. The measurements should be equal to within 1/8 inch (3 mm). This dimension should be approximately 11 and 7/8 inches (30.16 cm).

2. If the bar is not level, remove the cover from the support column. Locate the kettle level nut and loosen the setscrews that hold it to the shaft. With the setscrew loose, rotate the nut to move the support bar up or down. When level, retighten the setscrews.

3. When the bar is level and properly aligned, the agitator drive shaft should be directly above it. If the bar is not under the drive shaft it can be moved to either side by rotating the entire support column. The support column is rotated by loosening the four bolts that attach it to the top of the cabinet. Re-tighten and re-check the alignment.

G. Kettle Return Spring Adjustment

The kettle counter balance return spring holds the kettle in a level position when popping corn. It allows the kettle to be emptied when the handle is pulled down. The fixed end of the spring is held by a hooked plate with four adjustment points. The tension of this spring is adjusted by sliding a small tube over the fixed end of the spring and moving it to a different adjustment point.

H. Replacing Damaged Oil Discharge Tube

If the oil discharge tube, which terminates within the kettle, becomes damaged, the tube can be replaced easily. By using a 9/16 wrench to loosen and remove the bottom piece of the coupling. Pull the damaged tube out and replace it with P/N 1089-1 tube.

Make sure the mitered end of the tube is facing the opposite direction of the stirrer blade rotation. This is so that the unpopped kernels are not forced up into the tube. Tighten up the coupling.

I. Giles Hood

The filters contained within the Giles hood need to be cleaned and replaced on a regular basis. All filters must be in good operating condition and in place for the hood and popcorn machine to function properly. Filters must be cleaned as recommended in the Giles manual to prevent damage to the filters. Please refer to the Giles manual supplied for additional service requirements for the Giles ventless hood.

VIII. TROUBLESHOOTING

PROBLEM	POSSIBLE CAUSE	ACTION
Popping is slow.	Incorrect amount of corn and oil used.	Refer to the chart located in the Operations Manual.
	Kettle indicator light goes out more than 30 seconds before the corn finishes popping.	Temperature is set too low. (Refer to "Digital Temperature Control Adjustment.") If machine is equipped with Salt/Sugar option and popping in salt mode, timer may be set low. (Refer to the "Salt Timer Adjustment" and "Salt/Sugar One Pop Adjustment" sections).
	Voltage may be low.	Check the voltage at the circuit breaker with the kettle heat on. Extension cords or inadequate wiring will provide full voltage, if no load is applied. Once the kettle heat and auxiliaries are turned on, the voltage may drop 5 to 10 volts.
Indicator light stays on.	One of the elements in a multi-element pan may have failed.	Check the amperage draw of the heating elements, by using a clamp-on ammeter. 1. Remove the top of the machine by removing the screws that hold the top panel and lift the top off. 2. Turn on the kettle heat. 3. If machine has one-pop option shut off the oil switch and press the one-pop button. 4. Place the ammeter around the lead to the popper kettle as listed. The following current draws are normal. 120/208-240V and100/200V machines-black or red 230V machines-blue or brown 400V machines-black or brown

Do not adjust the temperature so high that the pan smokes at the end of the popping cycle. If set too high (over 500°F or 260°C), the kettle can become a serious fire hazard.

STANDARD NICKEL PLATED KETTLES

Kettle	Wire Color	Elements	120/208 –240V 100/200V
20 oz.	red	1447-A	15 amps
	black	1983-A	7.5 amps
32 oz.	red	1528-A & 1808-A	22.9 amps
	black	2615-A	8.3 amps

Kettle	Wire Color	Elements	230V
20 oz.	blue	1447-C	11.2 amps
	brown	1983-C	11.2 amps
32 oz.	blue	1528-C & 1808-C	15.6 amps
	brown	2615-C	15.6 amps

Kettle	Wire Color	Elements	400V
20 oz.	black	1447-C	7.5 amps
	brown	1983-C	3.2 amps
32 oz.	black	1528-C & 1808-C	11.5 amps
	brown	2615-C	4.1 amps

STAINLESS STEEL KETTLES

Kettle	Wire Color	Elements	120/208 –240V 100/200V
20 oz.	red	1447-A	15 amps
	black	1983-A	7.5 amps
32 oz.	red	1447-A & 14337-A	27.5 amps
	black	14336-A	10.4 amps

Kettle	Wire Color	Elements	230V
20 oz.	blue	1447-C	11.2 amps
	brown	1983-C	11.2 amps
32 oz.	blue	1447-C & 14337-C	19 amps
	brown	14336-C	19 amps

Kettle	Wire Color	Elements	400V
20 oz.	black	1447-C	7.5 amps
	brown	1983-C	3.2 amps
32 oz.	black	1447-C & 14337-C	14.3 amps
	brown	14336-C	5.4 amps

PROBLEM	POSSIBLE CAUSE	ACTION
A low amperage reading may indicate a problem in the kettle. One or more of the heat elements may not be functioning properly. If the element is not functioning, the possible causes are:	1. The element has burned out. 2. A lead wire has burned off one of the element terminals due to a loose connection.	In either case the kettle must be removed and the problem identified. 1. Remove kettle. (See section Kettle Removal for instructions.) 2. Check for short circuits inside the kettle. 3. If wires must be replaced, be sure to use nickel wire supplied by Cretors. Conventional copper or "stove" wire will have limited life. 4. Make a visual check for broken, loose, burned or heat damaged wires. If there are no obvious broken or loose wires shorting out on the kettle, the elements must be checked. 5. Perform a continuity test on the elements. It is possible that one of the elements has burned through the insulation and the casing is shorting out directly to the kettle bottom.

Continuity Test and Ohms Test

When checking Ohms, make sure that the meter probes are making good contact on the terminals. Remove the nickel buss bars that connect the electrical terminals on the heat elements.

Using a multimeter, check each element between the following points:

Terminal to terminal	Ohm readings should match chart listed below. If Ohm readings are not close, replace.
First terminal to element case	Continuity to case from terminal indicates a grounded element; replace. No continuity – functioning properly.

Second terminal to element case	Continuity to case from terminal indicates a grounded element; replace. No continuity – functioning properly.

32 oz. - **120V** elements	2615-A	1000 Watt – 14.4 Ω
	1808-A	1250 Watt – 11.5 Ω
	1528-A	1500 Watt – 9.6 Ω
		3.8 Ω (total)
Stainless Kettles		
	14336-A	1250 Watt – 11.5 Ω
	14337-A	1500 Watt – 9.6 Ω
	1447-A	1800 Watt – 8.0 Ω
		4.4 Ω (total)
20 oz. - **120V** elements	1983-A	900 Watt – 16.0 Ω
	1447-A	1800 Watt – 8.0 Ω
		5.3 Ω (total)
32 oz. – **240V** elements	2615-C	1000 Watt – 57.6 Ω
	1808-C	1250 Watt – 46.1 Ω
	1528-C	1500 Watt – 38.4 Ω
		15.6 Ω (total)
Stainless Kettles		
	14336-C	1250 Watt – 46.1 Ω
	14337-C	1500 Watt – 38.4 Ω
	1447-C	1800 Watt – 32.0 Ω
		17.5Ω (total)
20 oz. – **240V** elements	1983-C	900 Watt – 64.0 Ω
	1447-C	1800 Watt – 32.0 Ω
		21.3 Ω (total)

Replace failed heat elements with identical units available from your local dealer or from Cretors. Reassemble and reinstall kettle assembly onto the machine.

Do not attempt electrical repairs on the power supply circuit unless you are qualified to do so. The electrical shock associated with line voltages can cause serious injury or death.

The following procedures are performed with the power on. As with any electrical repairs, there is a shock hazard present.

PROBLEM	POSSIBLE CAUSE	ACTION
Kettle will not heat	The motor, light or any of the other components do not work.	Check power supply: 1. Is it plugged in? 2. Is the receptacle live? Is the machine plugged into the proper voltage? (Measure with voltmeter and compare to specification on nameplate of machine.)
	All components work but kettle switch will not light when turned on	If the machine is equipped with a Giles Ventless Hood make sure the exhaust switch is ON and the Giles Ventless Hood is operating.
	If kettle switch is on (lit) but no heat – the problem is in the machine.	Check the relay. The Diplomat digital temperature control uses a relay/contactor to control the power to the popper pan heat elements. To check the relay/contactor, perform the following operations: 1. To gain access to the relay/contactor, remove the top of the machine by removing the screws on the top. 2. Using a voltmeter, check the power to the relay/contactor coil, that are the small terminals in the center. 3. With the popper switch on, at room temperature, the digital temperature control should be calling for heat and providing power to the relay. (The temperature control is calling for heat the **OUT** light in the upper left hand corner of the control is on.) If the coil reading is not 120 volts, (230 volts on 230V and 400V, 50Hz machines) the problem is in the digital temperature control. 4. If the coil reading is 120 volts, (230 volts on 230V and 400V machines) check the voltage between the output terminal with wire #1 and the output terminal with wire #3 from the kettle support. If this does not have a reading of 208 or 240 volts, the relay is not functioning and needs to be replaced.

PROBLEM	POSSIBLE CAUSE	ACTION
	If machine has the one-pop option.	Use the same procedure as above. Then check the one-pop circuit. 1. With the power OFF. Check the one-pop switch for continuity by pressing and holding it down. Remove wires (mark wires for proper re-installation) from switch and press and hold. Using a multimeter, check for continuity from top to bottom of switch. If no continuity, replace switch. 2. Check the input (COM) and output (NO), on timer/relay.
Digital Temperature Control Display shows EO	Thermocouple has bad connections.	Check all connections.
	Thermocouple is bad. Should read 3-5 ohms if good.	Replace thermocouple.
Corn Burns	Agitator is not working.	Check to be certain the stirrer blade is on the bottom of the pan and is stirring the corn.
	Does the agitator driveshaft engage the blade center and turn it?	See section Kettle Alignment for instructions.
	Does the kettle sag when corn is added to the kettle causing the agitator to disengage?	See section Return Spring Adjustment for instructions.
	Check motor connections.	Loose wire.
	The motor is bad.	Replace.
	The correct amounts of corn and oil were not used.	See Operations Manual for correct amounts.
	Temperature is set too high.	Adjust temperature. (See Thermostat Adjustment Section.)
	The correct amounts of corn and oil were not used.	See Operations Manual for correct amounts.
	Temperature is set too high.	Adjust temperature. (See Thermostat Adjustment Section.)

Problem in the Cornditioner.

The Diplomat series of machines has four cabinet sizes: 36″, 48″, 60″ and 72″.
The heat system in the 36″ cabinet consists of a blower, heating element, and two thermostats mounted in the base of the cabinet. The upper thermostat is a manual reset high limit with a red button reset. The lower thermostat controls the temperature of the air supplied by the cornditioner. The Cornditioner circulates hot air through the popper case to keep popped corn fresh and crisp.

PROBLEM	POSSIBLE CAUSE	ACTION
With the power connected, turn the Cornditioner on.		
The switch light is on and no air is being delivered.	Check the high limit thermostat.	If tripped (red button out) reset by pressing red button.
	Check connections to blower.	Replace blower.
The switch light is on, and cool air is being supplied.	Check element.	Replace element.
	Check thermostat.	Replace thermostat.
The high limit trip goes off repeatedly.	Cornditioner screen blocked.	Clear passageway.
	Blower is not operating properly.	Replace blower.
	Bottom thermostat is stuck in on position.	Replace thermostat.
The Cornditioner heat system, in the 48", 60" and 72" cabinets, is the same and consists of a blower, heating element, and two thermostats mounted in a removable box. The upper thermostat is a manual reset high limit with a red button reset. The lower thermostat controls the temperature of the air supplied by the cornditioner. The cornditioner circulates hot air through the popper case to keep popped corn fresh and crisp. An indicator light on the cornditioner switch indicates when there is power to the circuit.		
With the power connected, turn the Cornditioner on.		
The switch light is on and no air is being delivered.	Check connections to the blower.	Replace blower.
The switch light is on and cooler air is being supplied.	Check element.	Replace element.
	Check thermostat.	Replace thermostat. The maximum air output temperature is approximately 140° F or (60° C). The thermostat is installed as a safety device and is not adjustable.
The indicator switch is on and air from blower is too hot.	Cornditioner screen is blocked.	Clear passageway.
	Blower is not operating properly.	Replace blower.
	Thermostat is stuck in on position.	Replace thermostat.
Exhaust odors.	Dirty filters	Wash grease filter.
		Replace charcoal media in the charcoal filter box.
Pump will not heat	With pump switch ON	Check pump switch. Remove wires from switch (mark wires for proper re-installation). Using a multimeter, check for continuity from top to bottom of switch. If no continuity, replace switch.
Pump will not pump oil.	Check One Pop Switch.	Remove wires (mark wires for proper re-installation) from switch and press and hold. Using a multimeter, check for continuity from top to bottom of switch. If no continuity, replace switch.

PROBLEM	POSSIBLE CAUSE	ACTION
	Check timer.	Check the input and output power to the pump timer, which is located in the pump or for Salt/Sugar Option: Diplomat timer is located under the wire cover. Diplomat 4', 5' or 6' machines, timers are on top.
	Check motor.	Check power at motor connection. If there is power at motor connection, but motor does not work, replace motor.

This manual is filled with time-saving and money-saving information regarding your Cretors popcorn popper. There is nothing, however, more important than the safety aids and warnings found throughout this document.

If you have any questions, contact your local distributor and if there are any additional questions, feel free to contact the Customer Service Department at C. Cretors and Company.

Additional copies of this manual can be obtained from C. Cretors and Company at the address listed below. Please provide model and serial number when requesting additional copies of this manual. There will be a nominal charge for additional copies.

Cretors guarantees this machine to be free of defects in parts, materials and workmanship for two years. Please take this time to fill out the factory registration card and return it to Cretors to activate your warranty. If you have any questions concerning the Cretors' warranty, please contact your local distributor or the Customer Service Department at C. Cretors and Company.

Cretors
We invented the popcorn machine
THEN JUST KEPT GOING!

C. CRETORS AND COMPANY
176 MITTEL DRIVE
WOOD DALE, IL 60191
PHONE (773) 588-1690, (800) 228-1885, FAX (847) 616-6970
WEB SITE: http://www.cretors.com *Email:* postmaster@cretors.com

DIPLOMAT 20/32 OZ CORNDITIONER VIEW

DOC: DI300030

DI20/32-A-3.3-C
06/06

MODEL SHOWN WITH SALT/SUGAR AND ONE POP OPTION

BEGINNING SERIAL : 0606

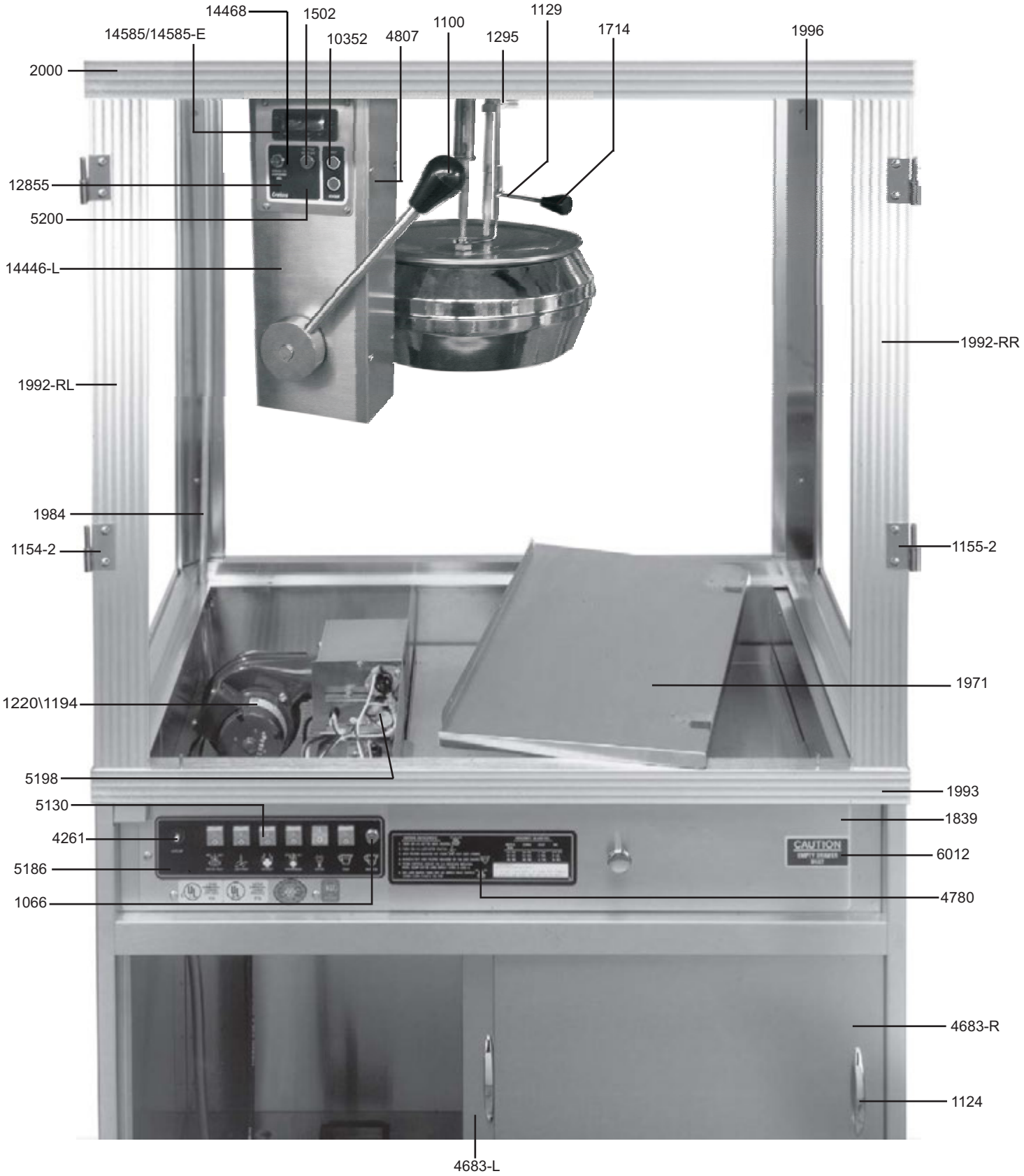

C. CRETORS AND COMPANY
3243 N. CALIFORNIA AVENUE
CHICAGO, IL 60618
PHONE: (773)588-1690, (800)228-1885, FAX: (773)588-2171
WEB SITE: http://www.cretors.com Email: postmaster@cretors.com

DIPLOMAT 20/32 OZ CORNDITIONER VIEW

DOC: DI300030

DI20/32-A-3.3-C
06/06

MODEL SHOWN WITH SALT/SUGAR AND ONE POP OPTION

BEGINNING SERIAL : 0606

1066	SWITCH PUSH- BUTTON
1100	KNOB
1124	HANDLE
1129	COVER LIFT ROD
1153	DOOR HINGE STRAP ONLY
1154-2	HINGE - LEFT
1155-2	HINGE - RIGHT
1194	BLOWER- 240V (2C914A)
1220	BLOWER - CORNDITIONER
1295	MAGNETIC CATCH
1502	INDICATOR LIGHT-GREEN
1714	KNOB
1839	WASTE CORN DRAWER
1971	WIRING COMPARTMENT COVER
1984	RISER TUBE
1992-RL	EXTRUSION - DIP. CORNER REAR LEFT
1992-RR	EXTRUSION - DIP. CORNER REAR RIGHT
1993	EXTRUSION - DIPLOMAT BOTTOM
1996	FRONT INSIDE CORNER
2000	EXTRUSION - DIPLOMAT TOP
3830	SWITCH-PUSH BUTTON-230 V
4261	CIRCUIT BREAKER - 120V/12A-PUSH
4683-R	DOOR - RIGHT - SS DIP BASE
4683-L	DOOR LEFT - SS DIP BASE
4780	DECAL - INSTRUCTIONS
4807	SUPPORT COLUMN COVER PLATE
5130	SWITCH - LIGHTED
5186	DECAL - SWITCHPLATE
5200	INDICATOR LIGHT
5753	SWITCH PLATE - DIP ROCKER SW- N/S
5753-E	SWITCH PLATE-DIP ROCKER N/S-230 V
5894-A	ELEMENT - CORNDITIONER 500W
6012	DECAL - CAUTION - EMPTY DRAWER
10352	INDICATOR LIGHT W/TABS-DUAL
12854	DECAL-POPPING INSTRUCTION SALT/SUGAR
12855	DECAL-DIPLOMAT DUMP COLUMN-ONE POP
12856	DECAL-DIPLOMAT DUMP COLUMN
14446-L	DECAL-CORN FIRST WARNING - LARGE
14468	SWITCH-DOUBLE POLE-PUSH BUTTON-ONE POP
14585	DIGITAL CONTROLLER - 120V
14585-E	DIGITAL CONTROLLER - 230V

IF EQUIPPED WITH SALT/SUGAR OPTION

12178	TIMER

STANDARD SWITCH PLATE

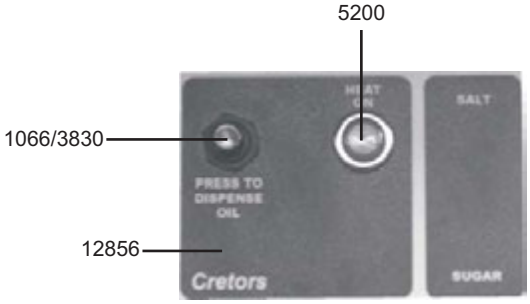

C. CRETORS AND COMPANY
3243 N. CALIFORNIA AVENUE
CHICAGO, IL 60618
PHONE: (773)588-1690, (800)228-1885, FAX: (773)588-2171
WEB SITE: http://www.cretors.com Email: postmaster@cretors.com

DIPLOMAT 32OZ. - BACK VIEW

BEGINNING SERIAL: 0606

DOC: DI300029

DI32-A/E-3.0-E
06/06

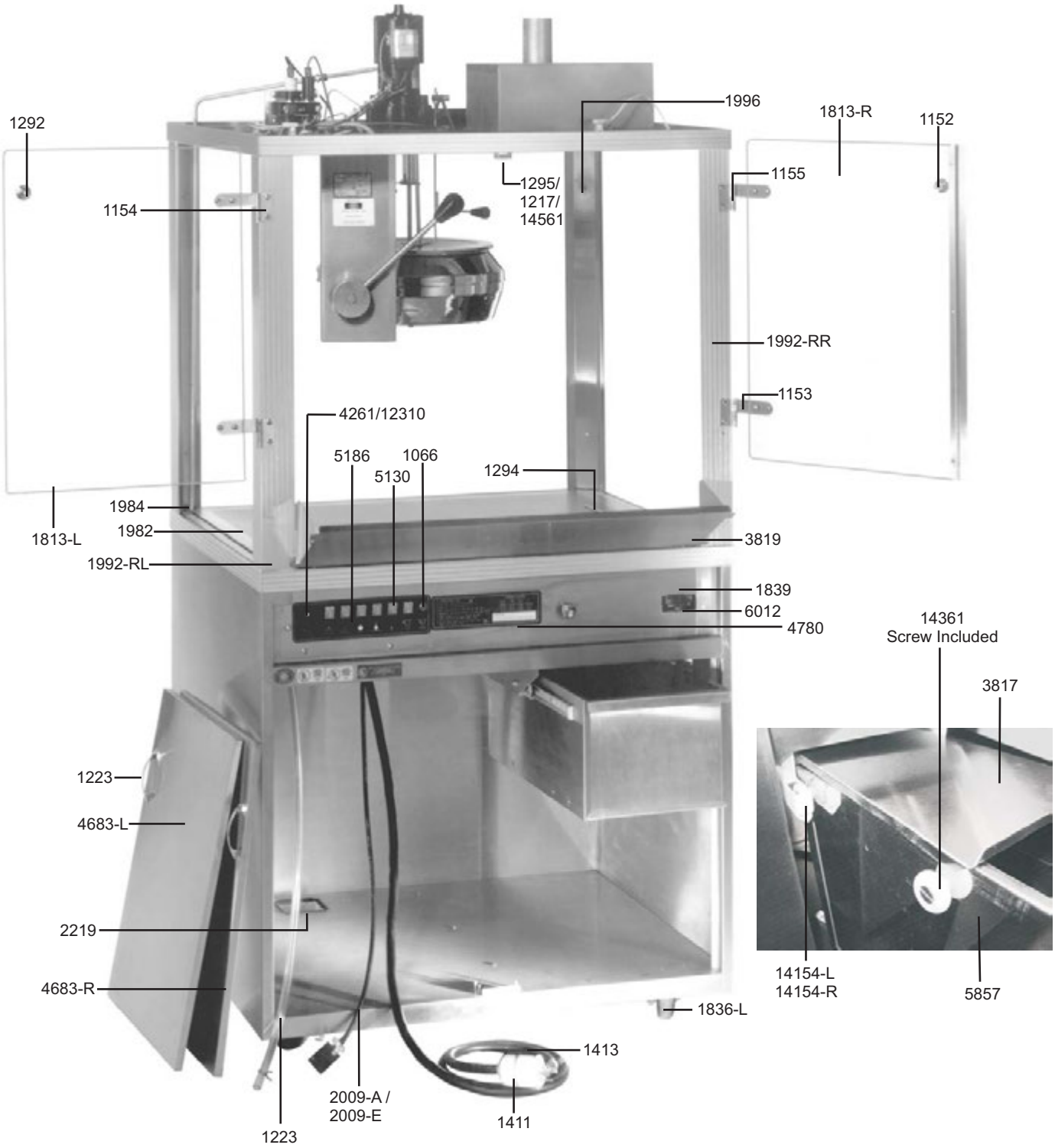

C. CRETORS AND COMPANY
3243 N. CALIFORNIA AVENUE
CHICAGO, IL 60618
PHONE: (773)588-1690, (800)228-1885, FAX: (773)588-2171
WEB SITE: http://www.cretors.com Email: postmaster@cretors.com

DIPLOMAT 32OZ. - BACK VIEW

BEGINNING SERIAL: 0606

DOC: DI300029

DI32-A/E-3.0-E
06/06

1066	SWITCH - PUSH BUTTON
1124	HANDLE (FOR BASE DOORS)
1152	DOOR LAP STRIP
1153	DOOR HINGE STRAP ONLY
1154	DOOR HINGE & STRAP - LEFT(2)
1155	DOOR HINGE & STRAP - RIGHT (2)
1217	MAGNETIC CATCH-RECTANGULAR
1223	TUBING - NALGENE - CLEAR - PER FOOT
1292	KNOB - CONCAVE W/ SCREW (2)
1294	HANDLE - LIFT
1295	MAGNETIC CATCH
1411	PLUG 30 AMP, 125/250V - 4 WIRE
1413	CORD 30 AMP - PER FOOT
1813-L/R	PLEXI-DOOR - LEFT/RIGHT (DRILLED)
1836	CASTER - WITHOUT BRAKE
1836-L	CASTER - WITH BRAKE
1839	WASTE CORN DRAWER
1982	POPPER CASE BOTTOM W/ HANDLE
1984	RISER TUBE
1992-RL	EXTRUSION DIP. CORNER - REAR LEFT
1992-RR	EXTRUSION DIP. CORNER - REAR RIGHT
1996	INSIDE CORNER - REAR
2009-A	PUMP CORD & PLUG -1200V
2009-E	PUMP CORD & PLUG 230V (EXPORT)
2219	TRIM PROTECTIVE - POWER CABLE
3817	50# CORN DRAWER COVER
3819	DROP SHELF - PIVOT STYLE
4261	CIRCUIT BREAKER - 120V/15A PUSH BUTTON
4683-L	DOOR - LEFT - SS DIP BASE
4683-R	DOOR - RIGHT - SS DIP BASE
4780	DECAL - INSTRUCTION 20/32/48 OZ
5130	SWITCH-LIGHTED
5186	DECAL - SWITCHPLATE - DIP - ROCKER SWITCH
5851	50# CORN DRAWER REPLACEMENT KIT
5857	50# CORN DRAWER
6012	DECAL - CAUTION 120/208 - 240/60 HZ
12310	FUSE HOLDER
14154-L	CORN DRAWER SUPPORT - LEFT
14154-R	CORN DRAWER SUPPORT - RIGHT
14361	ROLLER-DRAWER RUNNER
14561	CLIP-MAGNET-DIPLOMAT

C. CRETORS AND COMPANY
3243 N. CALIFORNIA AVENUE
CHICAGO, IL 60618
PHONE: (773)588-1690, (800)228-1885, FAX: (773)588-2171
WEB SITE: http://www.cretors.com Email: postmaster@cretors.com

DIPLOMAT 20/32 OZ - FRONT VIEW

BEGINNING SERIAL: 0606

DOC: DI300031

DI20/32-A/E-3.1-D
06/06

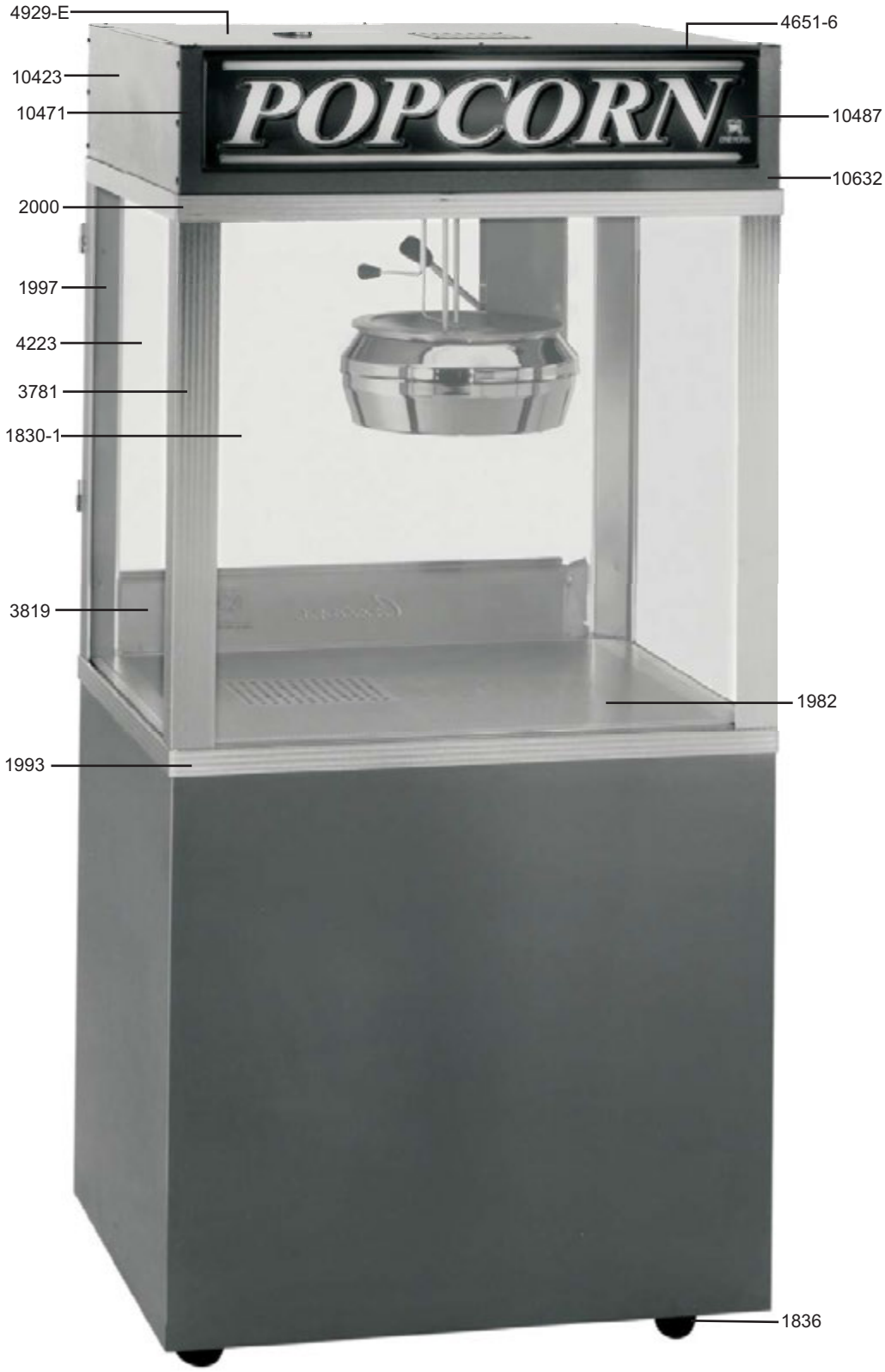

C. CRETORS AND COMPANY
176 MITTEL DRIVE
WOOD DALE, IL 60191
PHONE: (847)616-6900, FAX: (847)616-6970
WEB SITE: http://www.cretors.com

DIPLOMAT 20/32 OZ - FRONT VIEW

BEGINNING SERIAL: 0606

1829-1 GLASS (SIDE) DIPLOMAT TEMPERED
23-5/16” x 29-11/16” x 1/8”(NOT SOLD AT FACTORY)

1830-1 GLASS (FRONT) DIPLOMAT TEMPERED
29-3/4” x 31-1/4” x 1/8” (NOT SOLD AT FACTORY)

1836 CASTER WITHOUT BRAKE

1982 POPPER CASE BOTTOM W/ HANDLE

1993 EXTRUSION - DIPLOMAT BOTTOM

1997 INSIDE CORNER (REAR)

2000 EXTRUSION - DIPLOMAT TOP

3781 EXTRUSION - CORNER

3819 DROP SHELF

SIGN OPTION

5121 SIGN - POPCORN - RED & WHITE (NOT SHOWN)

10487 SIGN - POPCORN - RED & YELLOW

10632 SIGN BACKING

TOP ASSEMBLY

4651-6 TOP SIGN BRACKET

4929-E TOP PANEL SSTS-SD

10423 TOP SHELL - SIDE 28” WIDTH

10471 TOP SHELL - SSTS PANEL

HARDWARE FOR TOP ASSEMBLY

12848 # 8 SHEETMETAL SCREW-SS-3/8 LONG (12)

10539 6 x 3/8 PHIL HEAD-SHT MTL (6)

C. CRETORS AND COMPANY
176 MITTEL DRIVE
WOOD DALE, IL 60191
PHONE: (847)616-6900, FAX: (847)616-6970
WEB SITE: http://www.cretors.com

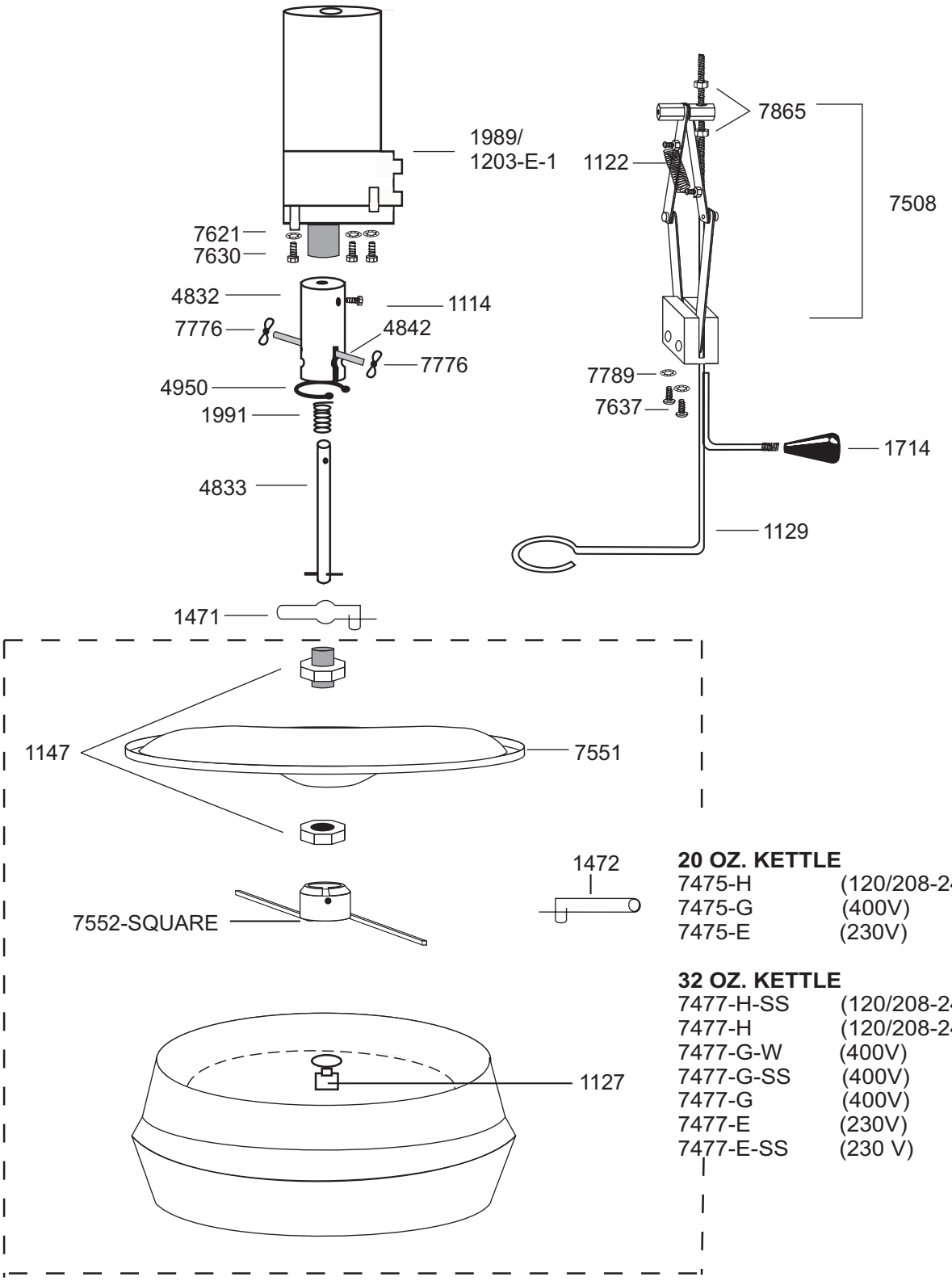

20 OZ. KETTLE

7475-H	(120/208-240V)
7475-G	(400V)
7475-E	(230V)

32 OZ. KETTLE

7477-H-SS	(120/208-240V)
7477-H	(120/208-240V)
7477-G-W	(400V)
7477-G-SS	(400V)
7477-G	(400V)
7477-E	(230V)
7477-E-SS	(230 V)

C. CRETORS AND COMPANY
3243 N. CALIFORNIA AVENUE
CHICAGO, IL 60618
PHONE: (773)588-1690, (800)228-1885, FAX: (773)588-2171
WEB SITE: Http://wwwcretor.com Email: postmaster @ cretors.com

1114	HEX CONNECTOR SET SCREW
1122	TRIP ARM SPRING
1127	PAN CENTER-NSF
1129	NSF-COVER LIFT ROD
1147	NSF-COVER CENTER AND NUT
1203-E-1	MOTOR - 230/400V
1471	COVER RETAINING SPRING
1472	STIRRER BLADE RETAINING SPRING
1714	KNOB
1989	MOTOR - 120/240V
1991	SPRING
4832	DRIVE SHAFT CONNECTOR
4833	DRIVE SHAFT AND PIN SPRING DUMP
4842	SHAFT/CONNECTOR BOLT W/ WING NUT
4950	RETAINING RING
7508	AUTOMATIC COVER LIFT
7551	KETTLE COVER NSF
7552-SQUARE	STIRRER BLADE DIP-SQUARE
7621	1/4" INTERNAL TOOTH LOCKWASHER
7630	1/4 x 20 x 1/2" HEX BOLT
7637	8-32 x 1/2 SS TRUSS HEAD
7776	8-32 STEEL WING NUT
7789	#8 STAR LOCKWASHER
7865	10-32 ELASTIC STOP NUT

DIPLOMAT/HEADLINER 32 OZ. -
3-ELEMENT KETTLE PARTS
120-208/240V & 400V

DOC: DI200018

DI/HDL32-H/G-2.0-C
06/06

EXPLODED VIEW "UPSIDE DOWN"
BEGINNING SERIAL: 0606

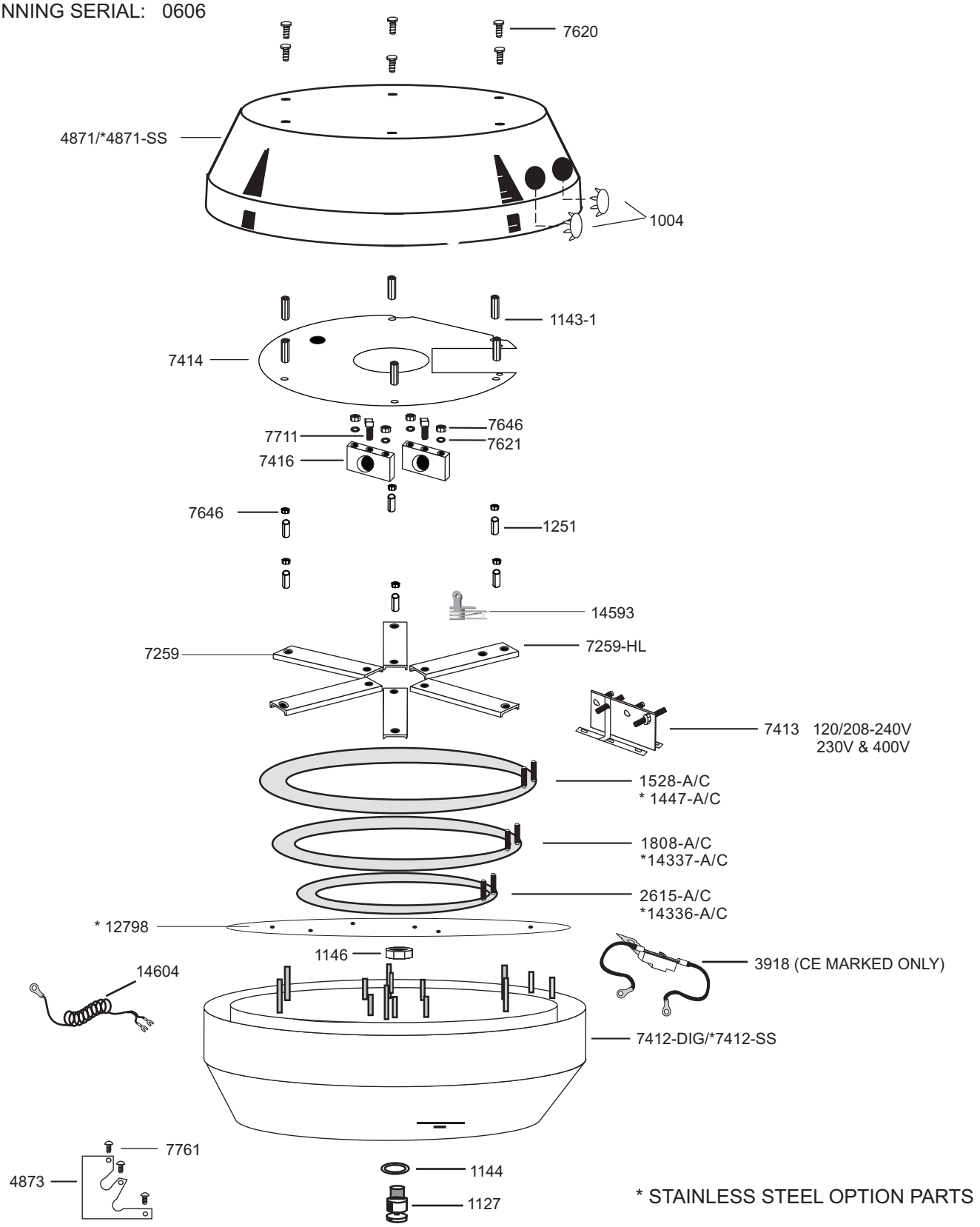

* STAINLESS STEEL OPTION PARTS

C. CRETORS AND COMPANY
3243 N. CALIFORNIA AVENUE
CHICAGO, IL 60618
PHONE: (773)588-1690, (800)228-1885, FAX: (773)588-2171
WEB SITE: Http://www.cretors.com Email: postmaster@cretors.com

DIPLOMAT/HEADLINER 32 OZ. -
3-ELEMENT KETTLE PARTS
120-208/240V & 400V

DOC: DI200018

DI/HDL32-H/G-2.0-C
06/06

EXPLODED VIEW “UPSIDE DOWN”
BEGINNING SERIAL: 0606

1004	7/16" THERMOSTAT HOLE COVER
1127	PAN CENTER - NSF
1143-1	HEX SPACER
1144	PAN CENTER WASHER
1146	1/2-20 PAN CENTER NUT
1251	5/8" SPACER
1447-A	ELEMENT 1800 WATT, 120 VOLT
1447-C	ELEMENT 1800 WATT, 240 VOLT
1528-A	1500 WATT, 120 VOLT ELEMENT
1528-C	1500 WATT, 240 VOLT ELEMENT
1808-A	1250 WATT, 120 VOLT ELEMENT
1808-C	1250 WATT, 240 VOLT ELEMENT
2155	THERMOCOUPLE
2615-A	1000 WATT, 120 VOLT ELEMENT
2615-C	1000 WATT, 240 VOLT ELEMENT
3918	HIGH LIMIT W/ WIRES
4871	RETAINER - DI 32/SD
4873	RETAINER PATCH - SD
7259	ELEMENT CLAMP 5-1/4”
7259-HL	ELEMENT CLAMP 5-1/4" - HIGH LIMIT
7412-DIG	PAN-DIPLOMAT 32 OZ-DIG
7413	MICA TERMINAL PLATE - (DI32/HDL32)
7414	BAFFLE PLATE
7416	PAN MOUNTING BLOCK
7620	1/4-28 x 3/8 HEX HEAD
7621	1/4" INTERNAL TOOTH LOCKWASHER
7646	1/4-28 HEX NUT
7711	5/16-18 x 1/2 SQUARE HEAD SCREW
7761	6 x 1/4 PHILTYPE A - N.P.
12798	DIFFUSER PLATE-32 OZ DIP SS PAN
14336-A	ELEMENT 1250 WATT, RING TYPE 120V
14336-C	ELEMENT 1250 WATT, RING TYPE 230V
14337-A	ELEMENT 1500 WATT, RING TYPE 120V
14337-C	ELEMENT 1500 WATT, RING TYPE 230V
14593	HIGH LIMIT - (LIMIT CONTROL)
14604	THERMOCOUPLE - RING TYPE - DIP

C. CRETORS AND COMPANY
3243 N. CALIFORNIA AVENUE
CHICAGO, IL 60618
PHONE: (773)588-1690, (800)228-1885, FAX: (773)588-2171
WEB SITE: Http://www.cretors.com Email: postmaster@cretors.com

DIPLOMAT/HEADLINER 32 OZ. 3-ELEMENT KETTLE DOC: DI200021 DI/DIL/HDL 32-E/G/H-2.1-B
03/06

BOTTOM VIEW - LOOKING DOWN ON PAN
BEGINNING SERIAL: 0606

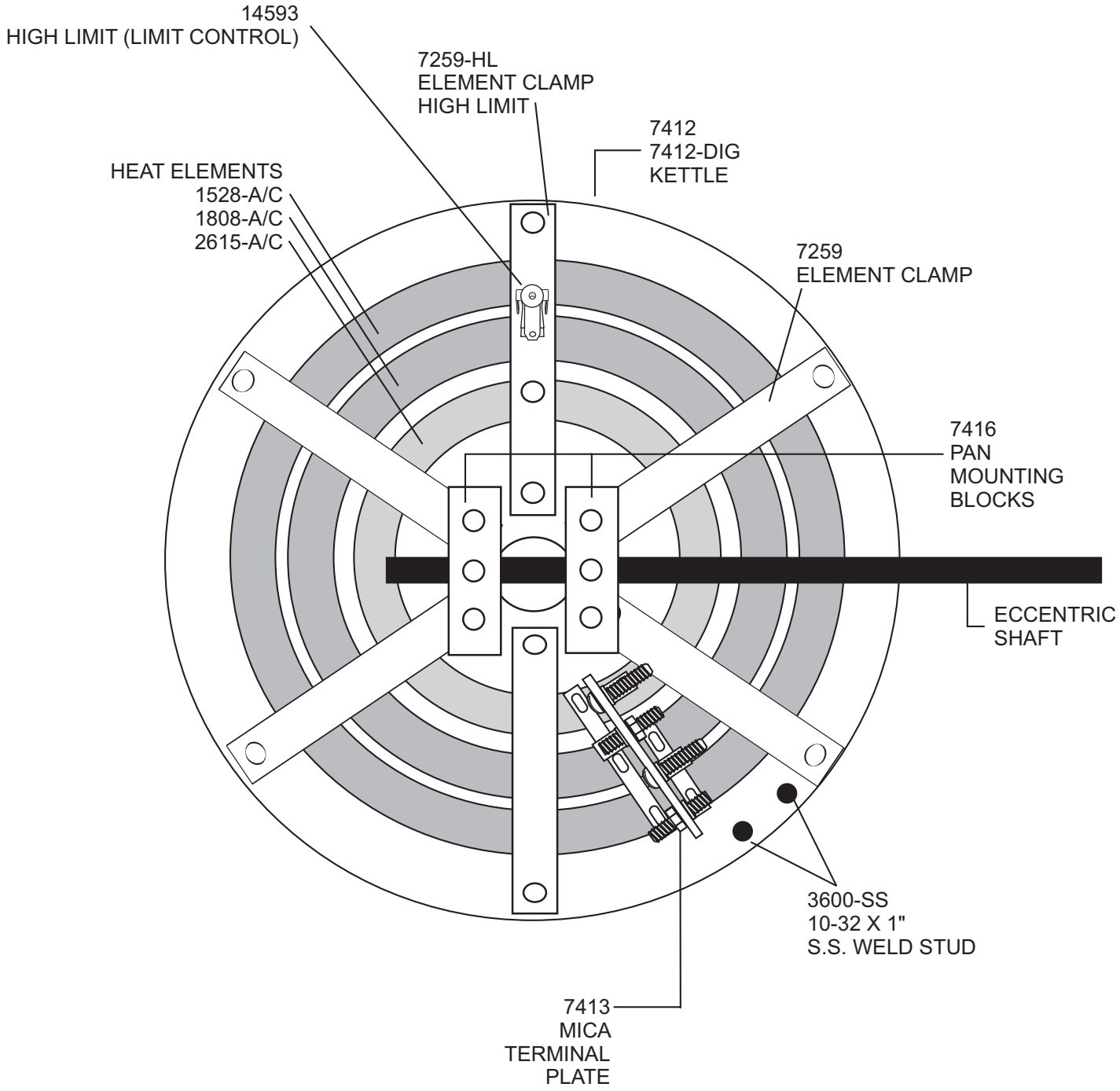

C. CRETORS AND COMPANY
3243 N. CALIFORNIA AVENUE
CHICAGO, IL 60618
PHONE: (773)588-1690, (800)228-1885, FAX: (773)588-2171
WEB SITE: Http://wwwcretor.com Email: postmaster @ cretors.com

DIPLOMAT KETTLE SUPPORT COLUMN 20/32 OZ. DOC: DI200022 DI-20/32-E/H-2.0-C
BEGINNING SERIAL: 0606 06/06

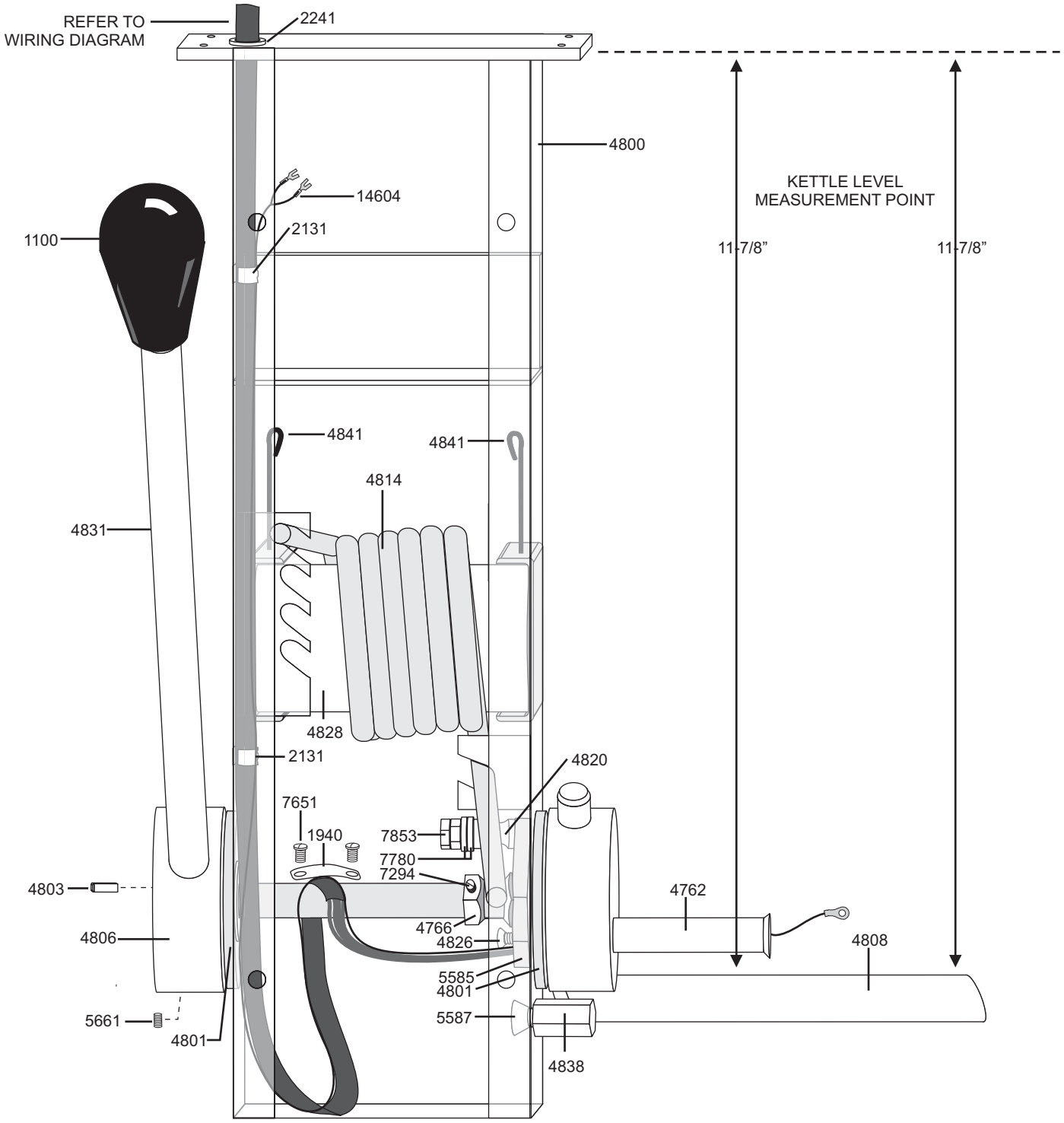

C. CRETORS AND COMPANY
3243 N. CALIFORNIA AVENUE
CHICAGO, IL 60618
PHONE: (773)588-1690, (800)228-1885, FAX: (773)588-2171
WEB SITE: http://www.cretors.com Email: postmaster@cretors.com

1100	KNOB
1940	WIRE CLAMP FOR DIPLOMAT
2131	PIPE CLAMP #125
2241	1/2" INSULINER SLEEVE
4762	WIRE GUIDE TUBE
4766	KETTLE LEVEL NUT
4800	SUPPORT COLUMN - SPRING DUMP
4801	BEARING - COLUMN SUPPORT
4803	KEY - DIPLOMAT SPRING DUMP
4806	HANDLE HUB
4807	SUPPORT COLUMN COVER PLATE (NOT SHOWN)
4808	ECCENTRIC - DIP SPRING RETURN
4814	RETURN SPRING
4820	ROLLER AND BEARING
4826	ARM BOLT 5/16-18 X 1
4828	SPRING HOLDER TUBE
4831	DUMP HANDLE - SPRING DUMP
4838	STOP BLOCK
4841	COTTER PIN 1/8 X 2
5382	WIRING HARNESS - DOMESTIC
5585	SPRING ADJUSTMENT ARM
5587	3/8-16 X 3/4 FH SOCKET CAP
5661	5/16-18 X 1/2 SET SCREW
5840	WIRING HARNESS - EXPORT400V
7294	10-32 X 3/16 SET SCREW, BRASS TIP
7651	10-24 X 1/2 B.H
7780	5/16 FLAT WASHER
7853	5/16-24 HEX NUT
14604	THERMOCOUPLE-RING TYPE-DIPLOMAT

C. CRETORS AND COMPANY
3243 N. CALIFORNIA AVENUE
CHICAGO, IL 60618
PHONE: (773)588-1690, (800)228-1885, FAX: (773)588-2171
WEB SITE: http://www.cretors.com Email: postmaster@cretors.com

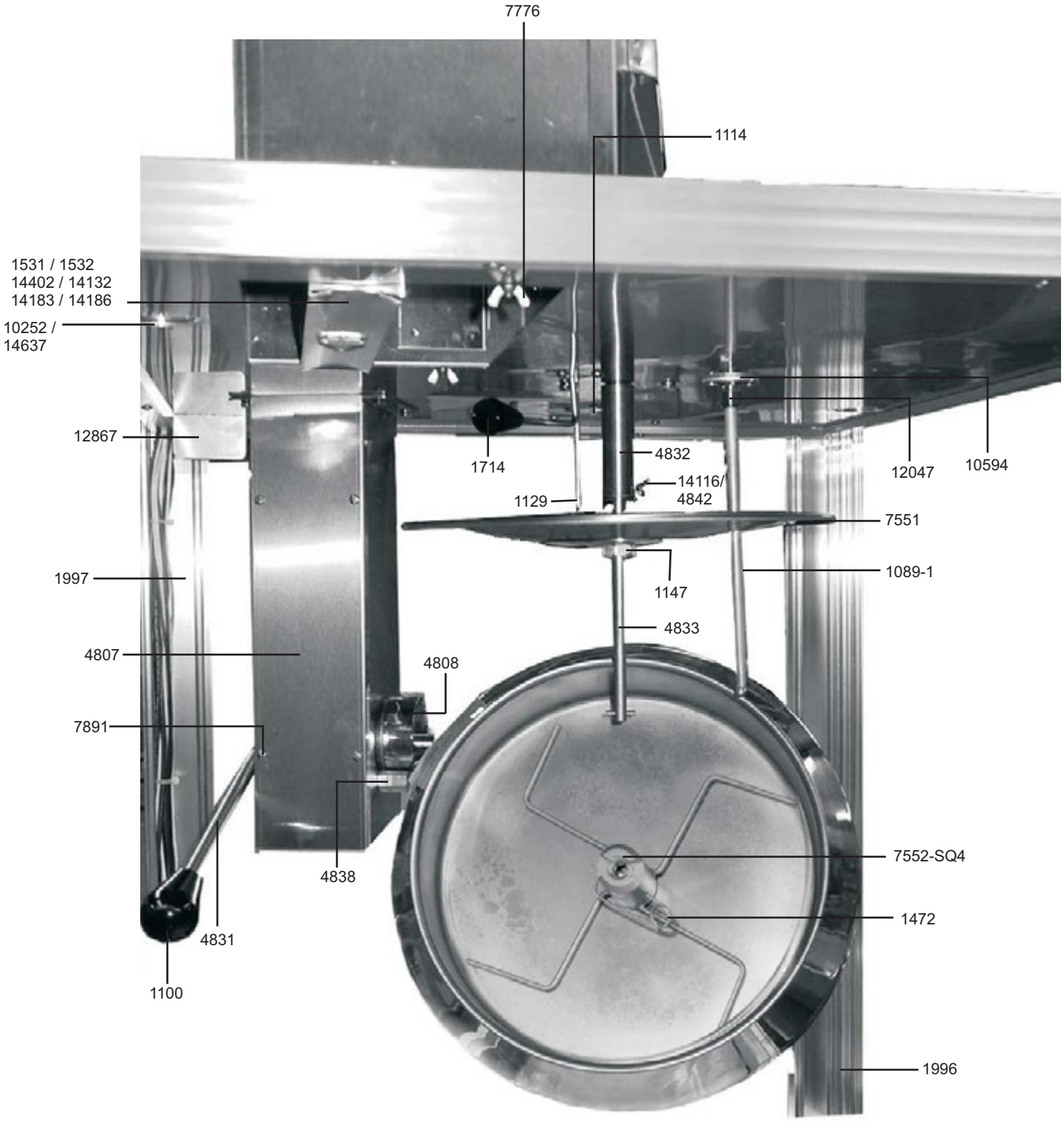

C. CRETORS AND COMPANY
3243 N. CALIFORNIA AVENUE
CHICAGO, IL 60618
PHONE: (773)588-1690, (800)228-1885, FAX: (773)588-2171
WEB SITE: http://www.cretors.com Email: postmaster@cretors.com

1089-1	BOTTOM DISCHARGE TUBE
1100	KNOB
1114	HEX CONNECTOR SET SCREW
1129	COVER LIFT ROD
1147	COVER CENTER AND NUT
1472	STIRRER BLADE RETAINING SPRING
1531	FILTER - GREASE
1714	KNOB
1996	FRONT INSIDE CORNER - DIP
1997	REAR INSIDE CORNER - DIP
4807	SUPPORT COLUMN COVER PLATE
4808	ECCENTRIC DIP SPRING RETURN
4831	DUMP HANDLE - SPRING DUMP
4832	DRIVE SHAFT CONNECTOR
4833	DRIVE SHAFT & PIN - SPRING DUMP
4838	STOP BLOCK
4842	SHAFT/CONNECTOR BOLT W/ WING NUT
7551	KETTLE COVER
7552-SQ4	STIRRER BLADE-DIP-4 SQUARE BLADES
7776	8-32 STEEL WING NUT
7891	8-32 x 3/16 SS PAN HEAD SCREW
10594	OIL TUBE NUT W/ SCREW
10252	LAMP-HALOGEN
12047	BULK HEAD UNION
12867	LIGHT BAFFLE
14116	KETTLE SHAFT PIN

NOT SHOWN

1532	CHARCOAL FILTER-W/CHARCOAL
14132	REPLACEABLE 9” x 12” FILTER (NEW DESIGN)
14183	FILTER HOUSING FOR 6” x 12” (SECURED WITH WING NUTS)
14186	REPLACEABLE 9” x 12” FILTER (OLD STYLE)
14402	FILTER HOUSING FOR 9” x 12” LIFT OUT
14637	HALOGEN LIGHT COVER

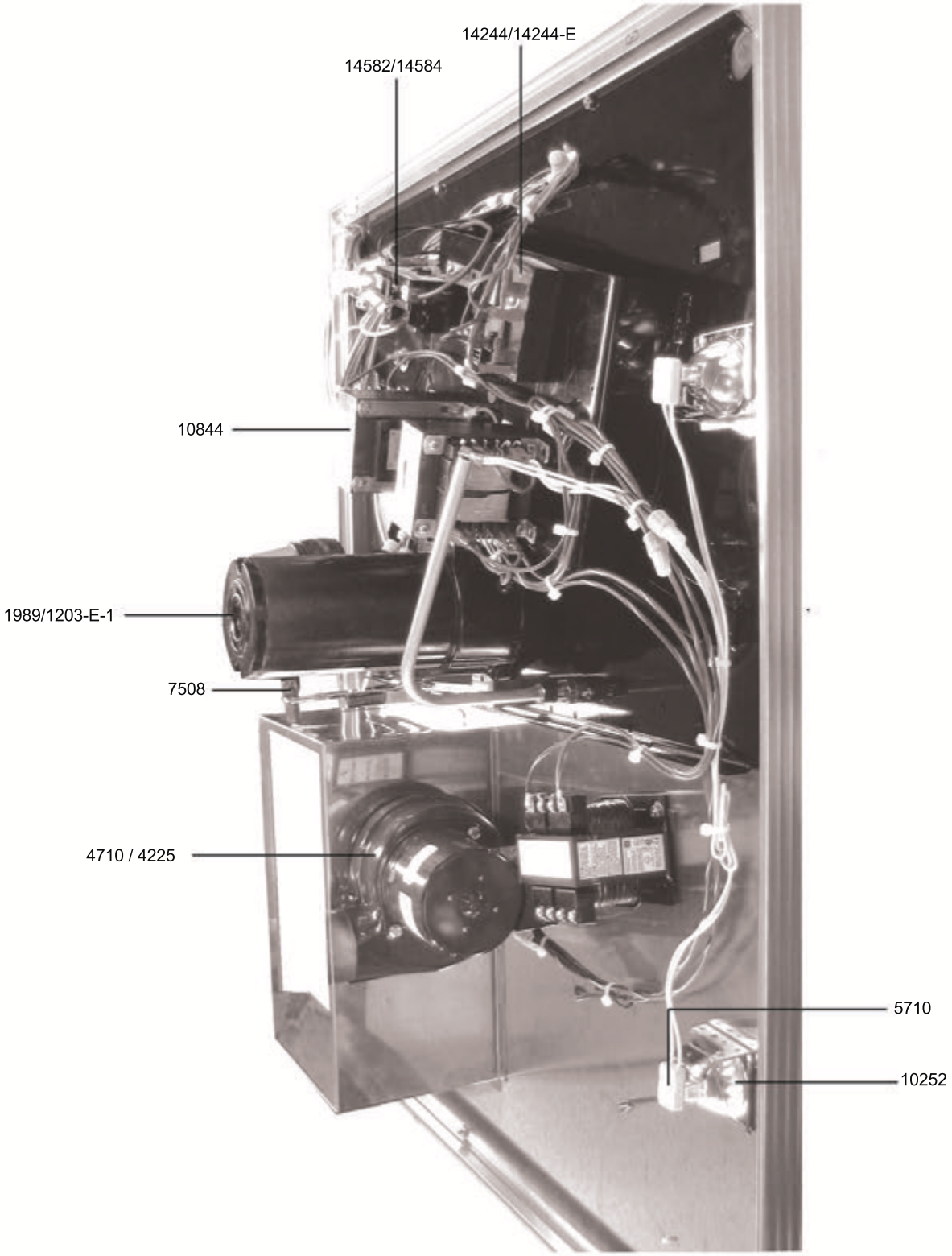

C. CRETORS AND COMPANY
3243 N. CALIFORNIA AVENUE
CHICAGO, IL 60618
PHONE: (773) 588-1690, (800) 228-1885, FAX: (773) 588-2171
WEB SITE: www.cretors.com EMAIL: postmaster@cretors.com

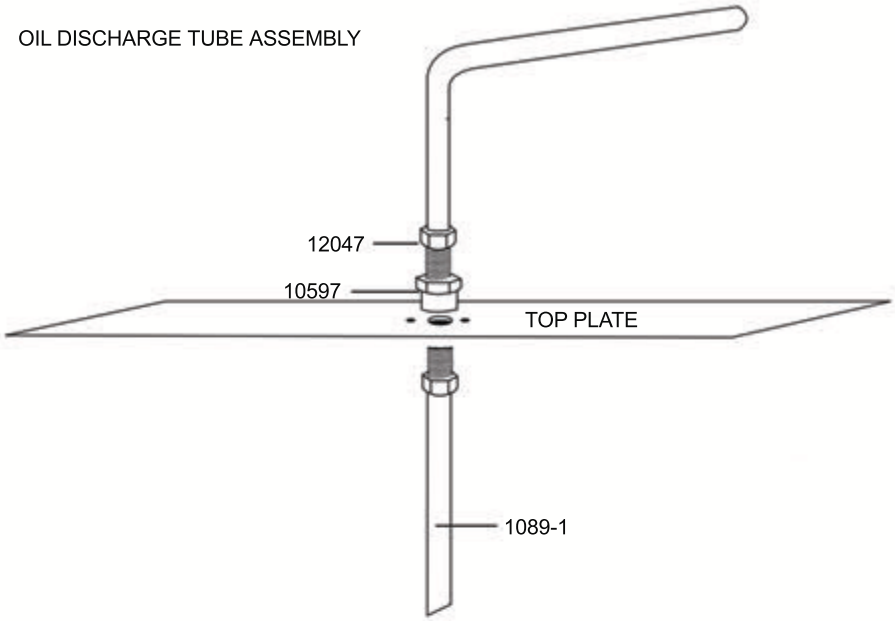

1089-1	DISCHARGE TUBE BOTTOM	10597	OIL TUBE SPACER
1203-E-1	MOTOR-EXPORT	10844	TRANSFORMER-100W,120V/230V-12V/24V
1989	MOTOR	12047	BULK HEAD UNION
4225	BLOWER-EXHAUST 230V	14244	TIMER/RELAY- 1 POP- 120V
4710	BLOWER-EXHAUST 120V	14244-E	TIMER/RELAY- 1 POP- 230V
5710	SOCKET-HALOGEN-QCX-34	14582	RELAY-120V.-DOUBLE POLE
7508	AUTOMATIC COVER LIFT	14584	RELAY-230V.-DOUBLE POLE
10252	LAMP-HALOGEN-Q50MR16C/CG55		

C. CRETORS AND COMPANY
3243 N. CALIFORNIA AVENUE
CHICAGO, IL 60618
PHONE: (773) 588-1690, (800) 228-1885, FAX: (773) 588-2171
WEB SITE: www.cretors.com EMAIL: postmaster@cretors.com

DIPLOMAT 20/32oz. DIGITAL CONTROL – NEW STYLE
WIRING DIAGRAM – 120/208–240V 60Hz
BEGINNING SERIAL NO. 1401

DOC: DDIHr10 01/2014

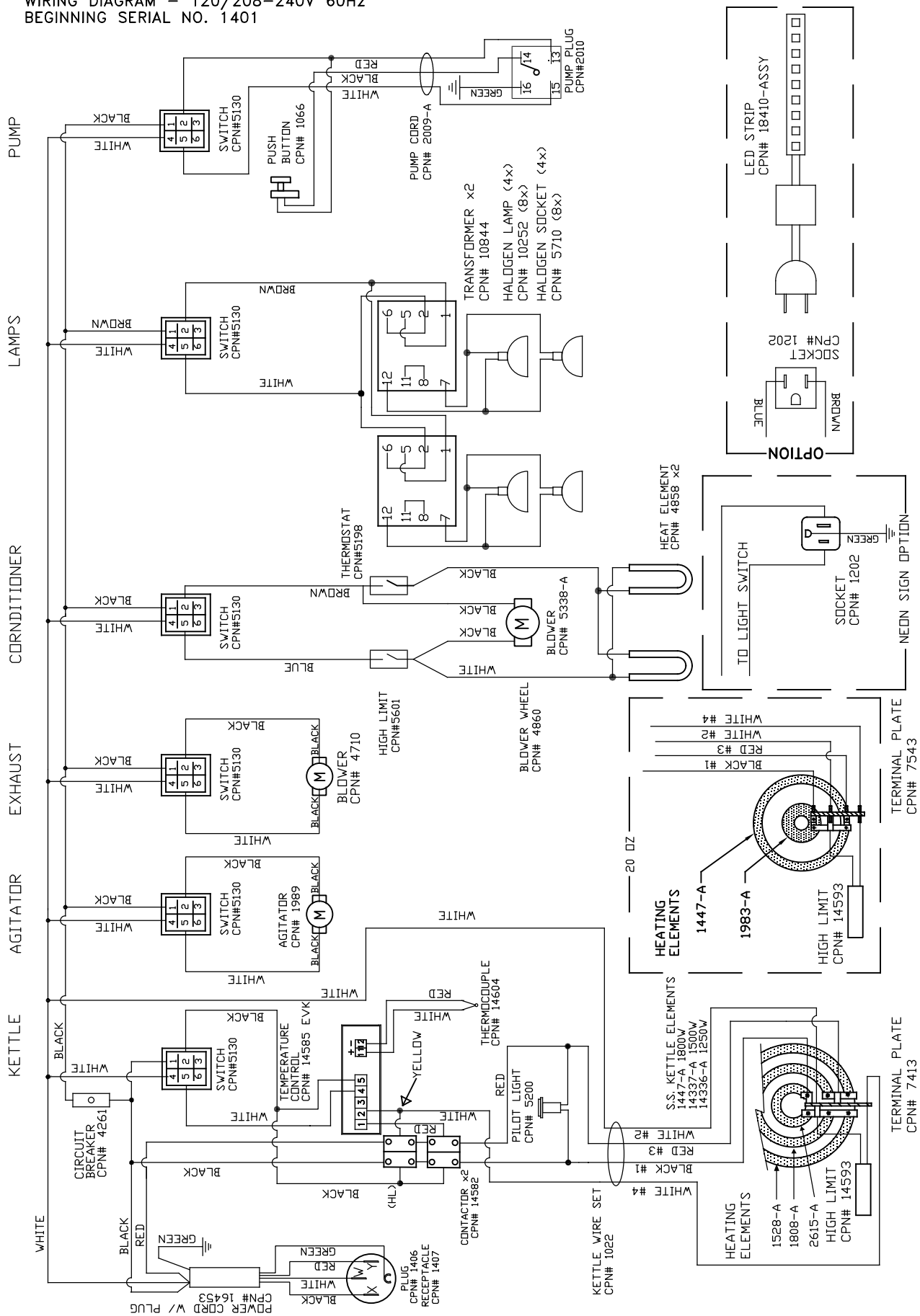

C.CRETORS AND COMPANY
3243 NORTH CALIFORNIA AVENUE
CHICAGO, ILLINOIS 60618
PHONE(773)588–1690, (800)228–1885, FAX (773)588–2171
WEB SITE: http://www.cretors.com Email: postmaster@cretors.com